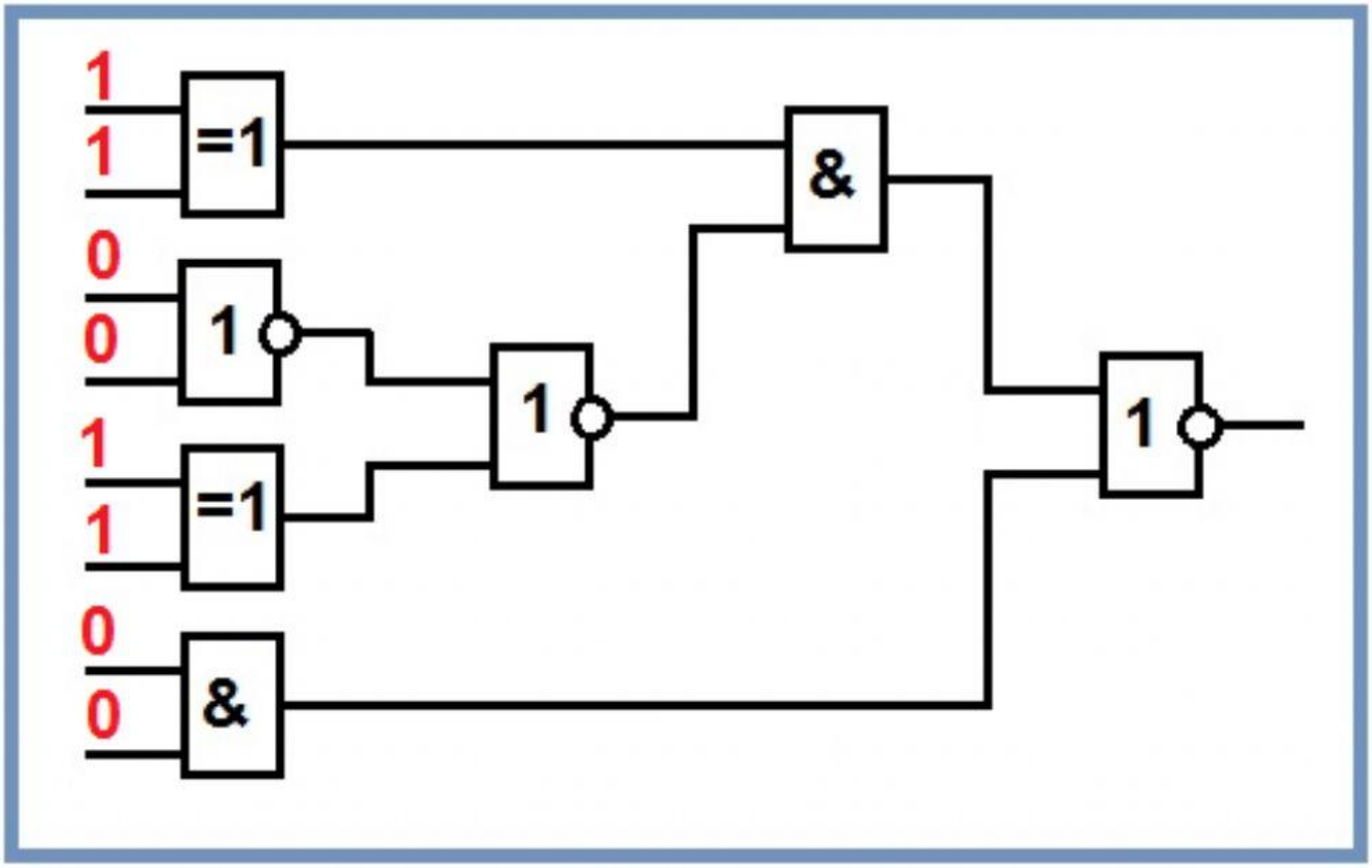
1
1
=1
0
0
1
1
1
=1
0
0
&
1
&
1