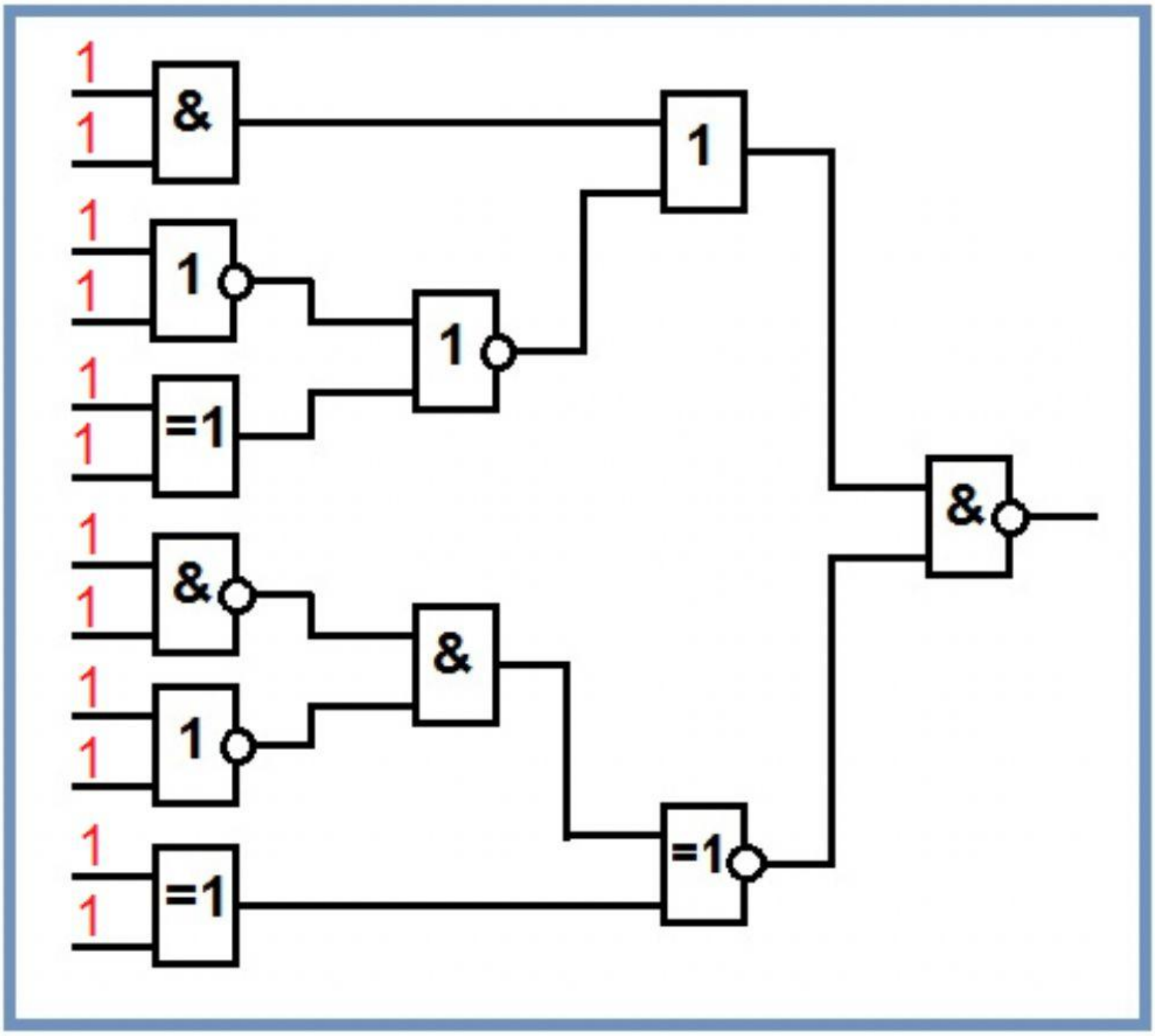
1
1
&
1
1
1
1
1
1
=1
1
1
&
1
1
&
1
1
1
1
=1
1
1
=1
&