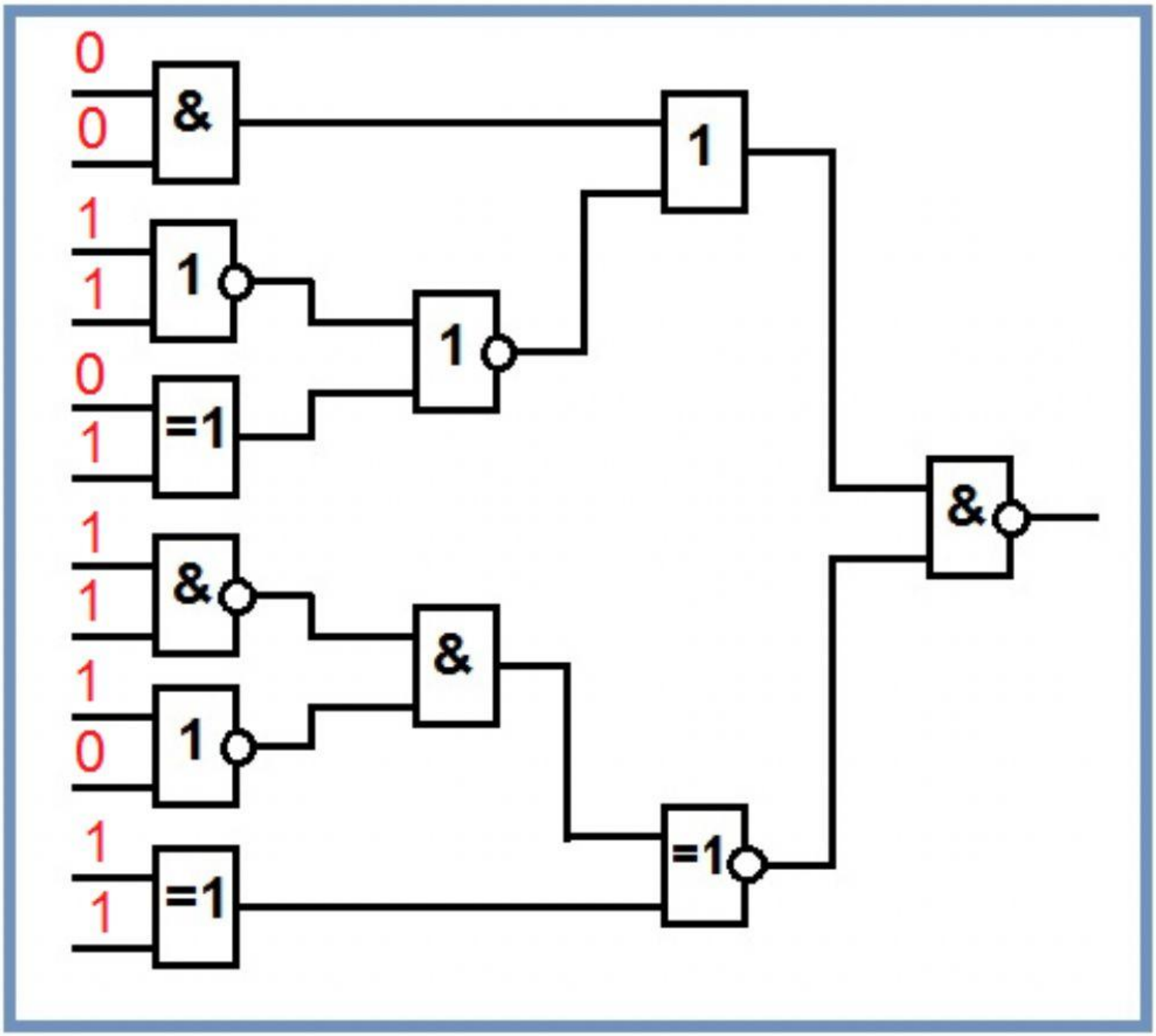
0
0
&
1
1
1
1
1
0
1
=1
1
1
&
1
0
1
1
1
=1
&
=1
&