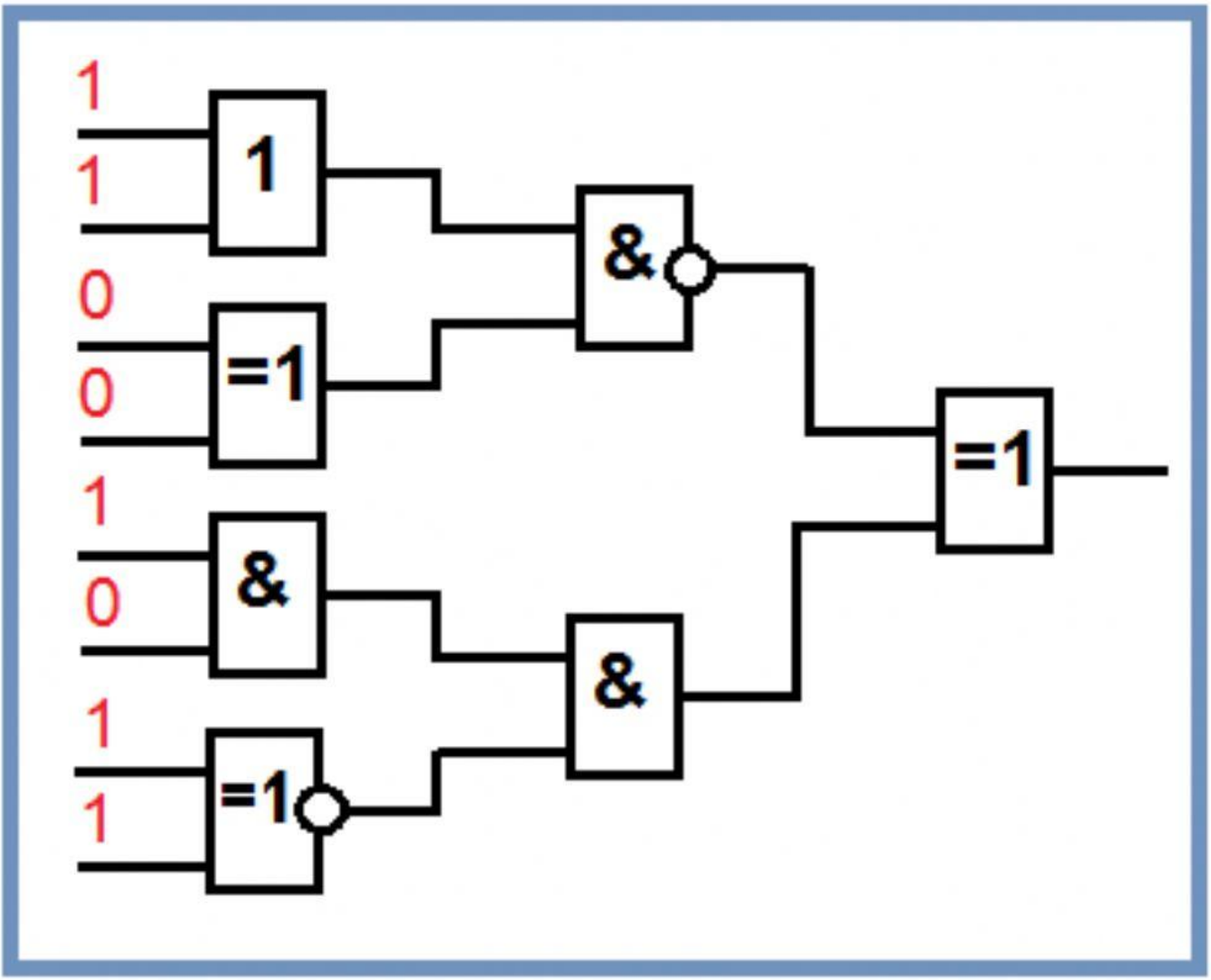
1
1
1
0
0
=1
1
0
&
1
1
=1
&
&
=1