MATH WORK SHEET (3rd GRADE)
SD BUDI MULIA DUA PANJEN

Name : _____ **Class** : _____

In the first part is an example of how to make a double from a number. Do the worksheet as an example to make double!
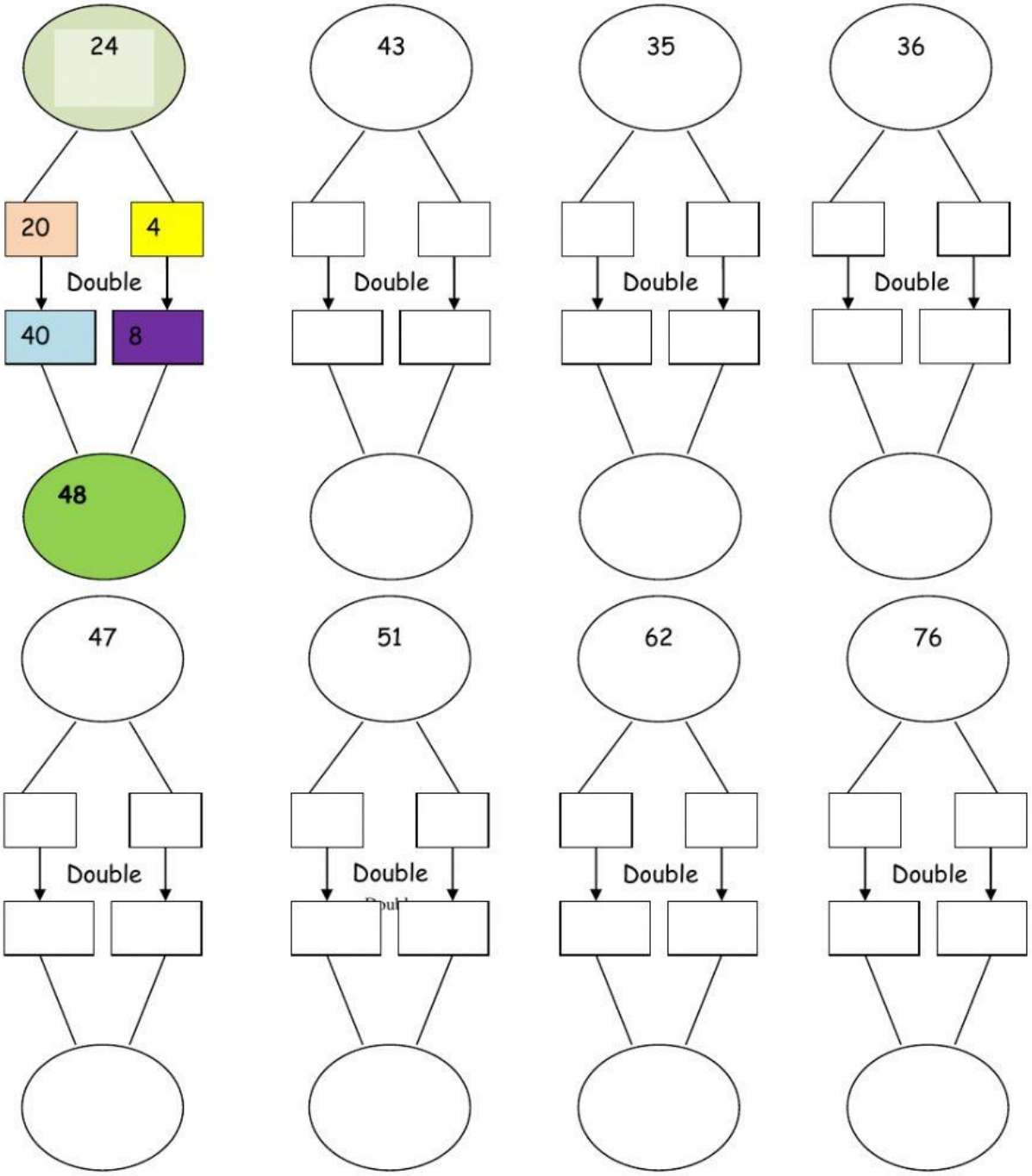
Example :