UNIT 5: WORKING OFFSHORE

LESSON 5

ACTIVITY 1: Listen to and read the conversation. AUDIO 41

A: How long is this pipe?
B: It's 30 feet long.
A: Did you say 30 feet?
B: Yes, that's correct.
A: What's that in metres?
B: About 10 metres.
A: OK. What's the diameter?
B: The outside diameter is 6 inches. The wall thickness is half an inch. And, before you ask, an inch is about two and a half centimetres. So that's about 15 centimetres outside diameter and a wall thickness of just over a centimetre.
A: So the bore is about 12.5 centimetres.
B: That's right.
A: OK, thank you.
B: You're welcome.

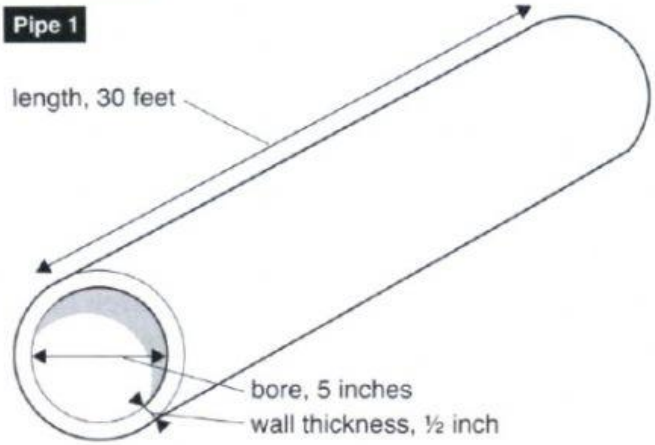

Bore: diametro interno
Wall thickness: grosor de la pared
Length: longitud

ACTIVITY 2: Study this table.

Para hablar de dimensiones podemos usar el adjetivo o el sustantivo pero, cada uno tiene una "fórmula" diferente al armar la oración.

Adjetivos: como se observa en la tabla (en la primera columna), se colocan al final después de la medida. Veamos el orden de las palabras en la oración.

subject	verb	Number + metres, centimetres, inches, etc.	adjective
The pipe	*is*	*20 metres*	*long.*
La tuberia	*es / tiene*	*20 metros*	*de largo*

Dimensions

We can use a noun or the related adjective to talk about dimensions.	Adjective	Significados de los adjetivos
	The pipe is 20 metres ***long****.*	... de largo
	The wall is half an inch ***thick****.*	... de grueso
	The sea is 500 metres ***deep****.*	... de profundo
	The heliport is 25 metres ***wide****.*	... de ancho
	The derrick is 100 metres ***high****.*	... de alto

ACTIVITY 3: Study this chart.

En el caso de sustantivos, la oración se arma de diferente manera.

Sustantivos: como se observa en la tabla (en la segunda columna), se colocan al principio de la oración. Veamos el orden de las palabras en la oración.

subject	verb	Number + metres, centimetres, inches, etc.
The length of the pipe	*is*	*20 metres*
La longitud de la tubería	*es de/ tiene*	*20 metros*

Dimensions

We can use a noun or the related adjective to talk about dimensions.	Significados de los sustantivos	Noun
	La longitud de la tubería...	*The **length** of the pipe is 20 metres.*
	El grosor de la pared...	*The **thickness** of the wall is half an inch.*
	La profundidad del mar...	*The **depth** of the sea is 500 metres.*
	El ancho/anchura del helipuerto...	*The **width** of the heliport is 25 metres.*
	La altura de la torre de perforación ...	*The **height** of the derrick is 100 metres.*

ACTIVITY 4: This table shows the use of the adjective and the noun. *(Esta tabla muestra el uso del adjetivo y del sustantivo)*

Dimensions

We can use a noun or the related adjective to talk about dimensions.	Adjective	Noun
	*The pipe is 20 metres **long**.*	*The **length** of the pipe is 20 metres.*
	*The wall is half an inch **thick**.*	*The **thickness** of the wall is half an inch.*
	*The sea is 500 metres **deep**.*	*The **depth** of the sea is 500 metres.*
	*The heliport is 25 metres **wide**.*	*The **width** of the heliport is 25 metres.*
	*The derrick is 100 metres **high**.*	*The **height** of the derrick is 100 metres.*

Drag and drop the words in the correct order to make sentences.

PIPELINE ***KILOMETRES*** ***IS*** ***LONG*** ***THE*** ***FIVE***

_____ _____ _____ _____ _____ _____

FIVE HUNDRED ***SEA*** ***IS*** ***THE*** ***DEEP*** ***METRES***

_____ _____ _____ _____ _____ _____

WIDE	THE	METRES	IS	HELIPORT	TWENTY FIVE
_____	_____	_____	_____	_____	_____
METRES	OF THE	DRILLING PLATFORM	THE	IS FORTY	LENGTH
_____	_____	_____	_____	_____	_____
THE	IS	PLATFORM	HIGH	FIXED	710 METRES
_____	_____	_____	_____	_____	_____

ACTIVITY 5: Look at this pipe. Right or wrong? Choose the correct option.

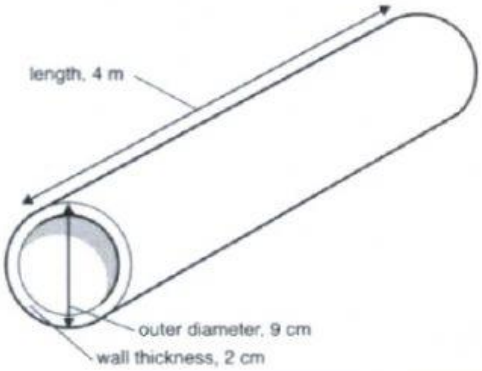

1. The long of the pipe is 4 metres.	RIGHT √	WRONG X
2. The pipe is 4 metres long.	RIGHT √	WRONG X
3. The length of the pipe is 4 m.	RIGHT √	WRONG X
4. The pipe is 4 m. of long.	RIGHT √	WRONG X
5. The wall is 2 cm thickness.	RIGHT √	WRONG X
6. The wall is 2 cm tick.	RIGHT √	WRONG X
7. The thick of the wall is 2 cm.	RIGHT √	WRONG X