Newton worksheet 18

Tension when boxes are on a slope

Examples:

✓ **Do not leave any space between sin and the angle eg. sin20**

1.

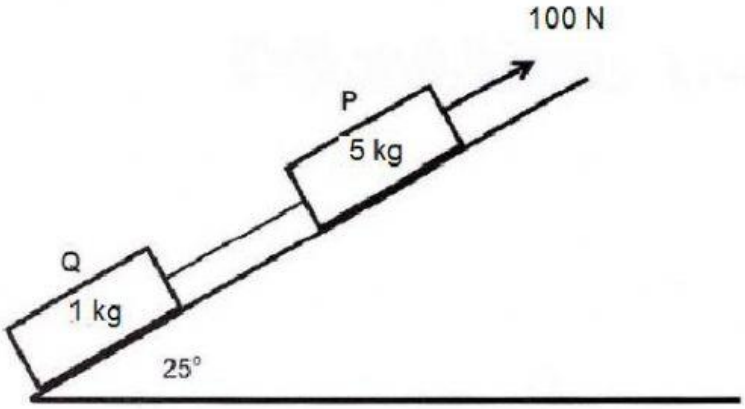

Calculate:

1.1 The Fnet
1.2 The acceleration of the system
1.3 The tension in the string

1.1 When you do a quick mental calculation you realise FA > Fgll

Fnet = F_A – Fgll

= 100 – m.g.____⊖

= 100 – 6(9,8) ___25

= _____ N up the slope

* you are **allowed** to look at the system as a whole, since both boxed move in the same straight line)

You **cannot** combine the masses and look at the system as a whole when the boxes don't move in the same straight line

Eg

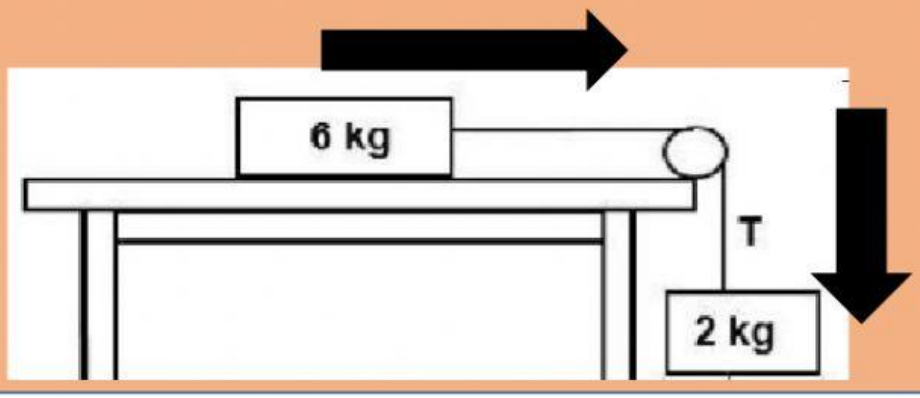

1.2 Fnet = m.a

_____ = _____.a

a = _____ $m.s^{-2}$ up the slope

1.3 Remember that when you calculate tension- you **must** isolate a box (any box) and then calculate the tension. We will do both, so that you can see both options.

1 kg	5 kg
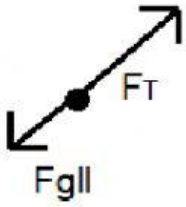	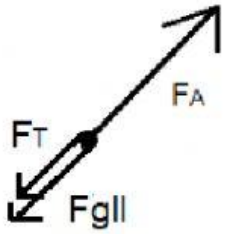
Fnet = m.a F_T - Fgll = (1)12,53 F_T – 1(9,8)._____ = 12,53 F_T= 16,67 N up the slope *It is OK if there can be a decimal difference sometimes	Fnet = m.a F_A – F_T - Fgll= m.a 100 – F_T – (5)(9,8)._____ = 5(12,53) F_T = 16,64 N down the slope

Eg 2

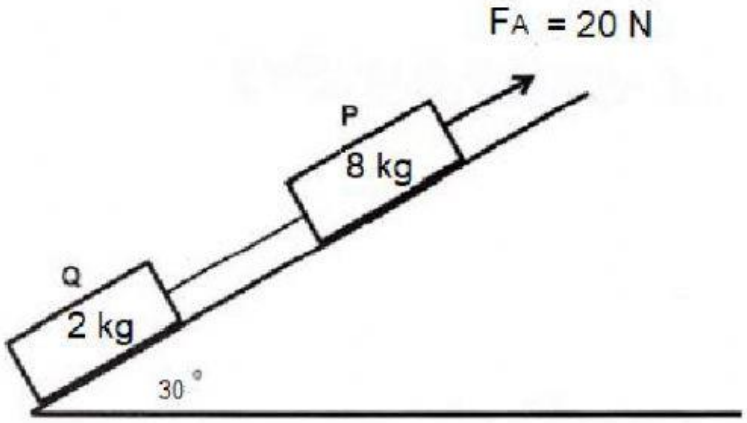

Calculate:

2.1 The Fnet
2.2 The acceleration of the system
2.3 The tension in the string

2.1 **Looking at the system as a whole**

The Fgll is actually greater than the F_A in this situation

Fnet = Fgll - F_A

Fnet = m.g.sin $\ominus$ - F_A

Fnet = 10(9,8). _____ - _____

Fnet = _____ N down the slope

If you ever get a negative here then you know that you have chosen the wrong force as your bigger force

2.2 Fnet = m.a

_____ = _____.a

a = _____ $m.s^{-2}$ down the slope

2.3

2 kg	8 kg
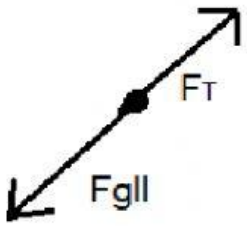 Fnet = m.a F_{gll} - F_T = (2)_____ _____(9,8)._____ - F_T = 5,8 F_T = _____N up the slope	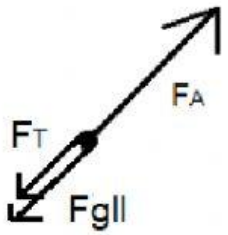 Fnet = m.a F_T + Fgll- 20 = m.a F_T + (_____)(9,8)._____ - 20 = 8(_____) F_T = _____ N

3. The coefficient of kinetic friction on the box is 0,3 for the surface below

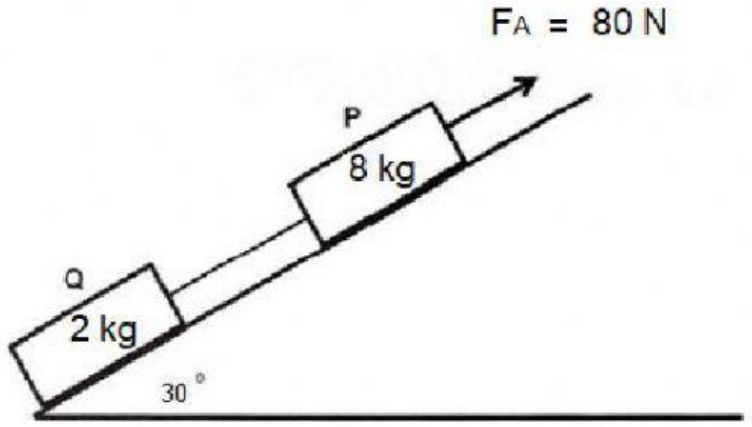

Determine:

3.1 The direction in which the system will move
3.2 The kinetic friction on the 2 kg box
3.3 The kinetic friction on the 8 kg box
3.4 The Fnet
3.5 The acceleration of the system
3.6 The tension in the string

3.1 The Fa is greater than Fgll, thus the system moves up the slope

3.2 $f_k = \mu_k.F_N$

f_k = (____).(____)(9,8)._____

= _____ N down the slope

3.3 $f_k = \mu_k.F_N$

f_k = (_____)(8)(9,8)._____

= _____ N down the slope

3.4 Fnet = Fa – Fgll – fk – fk

= 80 – (10)(9,8).sin30 – 5,09 – 20,37

= _____ N up the slope

3.5 Fnet = m.a

_____ = ____.a

a = _____ $m.s^{-2}$ up the slope

3.6

2 kg	8 kg
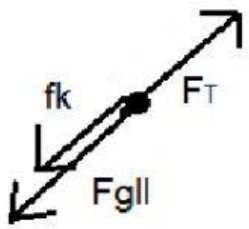	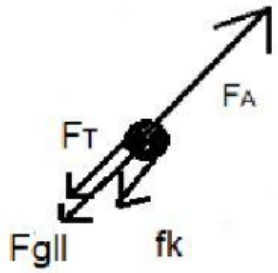
Fnet = m.a FT – Fgll – fk = m.a FT – (2)(9,8)._____ – 5,09 = __.(___) FT = _____ N up the slope	Fnet = m.a Fa – FT – Fgll – fk = m.a 80 – FT – (8)(9,8)._____ – 20,37 = (__)(___) FT = _____ N down the slope

Homework

Pg 77 Q3

Pg 218 Q2