SEMESTER 1 TEST

GRADE 1

Full name: ……	**Mark: /10**		
School: ……	**Listening**	**Reading**	**Writing**
Class: ……	/3.5	/3.25	/3.25

LISTENING

PART 1

4 questions (1pt)

Listen and draw lines. There is one example.

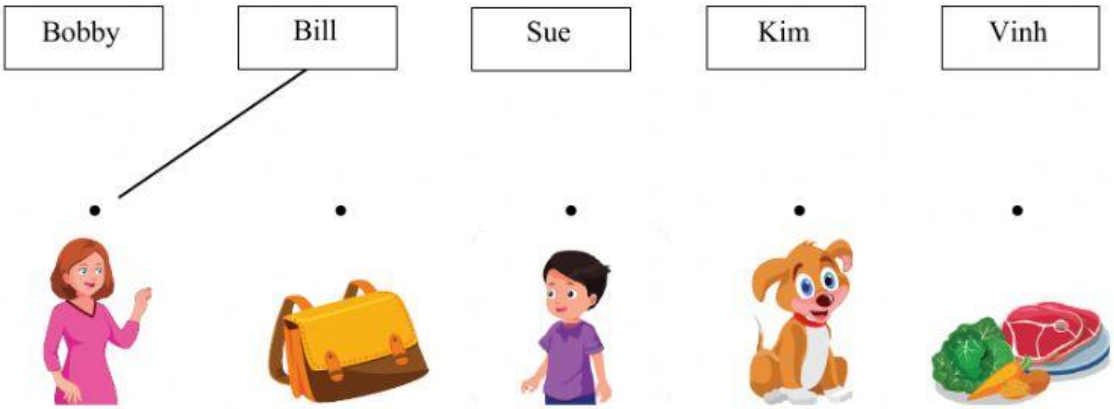

PART 2

4 questions (1.5pts)

Listen and tick (√) the box. There is one example.

Example:

A		B	√	C	

LIVEWORKSHEETS

5.

A ☐

B ☐

C ☐

6.

A ☐

B ☐

C ☐

7.

A ☐

B ☐

C ☐

8.

A ☐

B ☐

C ☐

PART 3

4 questions (1pt)

Listen and color. There is one example.

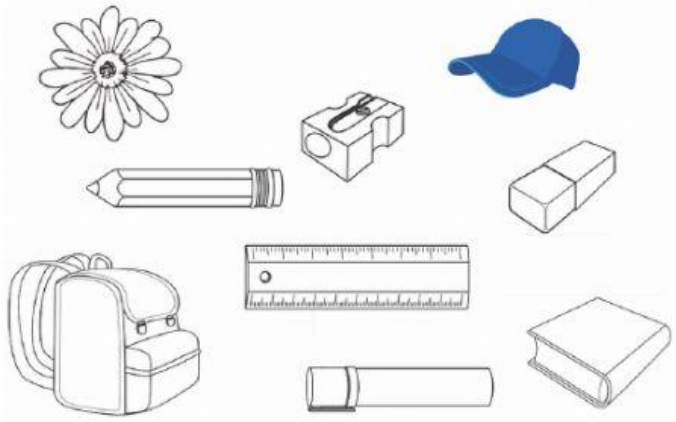

LIVEWORKSHEETS

READING

PART 1

3 questions (0.75pt)

Read and draw lines. There is one example.

Listen.

1. This is my mother.

2. It's a door.

3. I like dogs.

PART 2

4 questions (1pt)

Look, read and circle. There is one example.

Example:

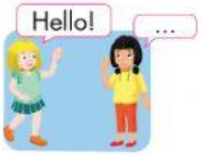

Hello, Kim Goodbye, Kim.

4.

Stand up. Sit down.

5.

That's OK. You're welcome.

6.

That's OK. Nice to meet you.

LIVEWORKSHEETS

7.

This is a snake. This is a bear.

PART 3

3 questions (1.5pts)

Look, read and put a tick (√) or a cross (×) . There is one example.

Example:

Listen. √

Stand up. ×

8.

This is a girl. ☐

9.

It's a white flower. ☐

10.

Touch your leg. ☐

LIVEWORKSHEETS

WRITING
PART 1

3 questions (0.75pt)

Order the letters. There is one example.

Example

d e r — red

1.

a h t e f r — _ _ _ _ _ _

2.

n e o y m k — _ _ _ _ _ _

3.

p a h e t e n — _ l _ _ _ _ _ _

PART 2

2 questions (1pt)

Order the words. There is one example.

Example

a | pencil | It's

It's a pencil.

4. a | It's | bag | yellow

_____

5. is | brother | This | my

_____

LIVEWORKSHEETS

PART 3

3 questions (1.5pts)

Look and write. There is an example.

~~book~~	birds	blue	cap

Example: It's a _ _ _ _.

→ It's a book.

My name is Bill. This is my (6) _ _ _. It's (7) _ _ _ _.

I like (8) _ _ _ _ _. I like cats, too.

LIVEWORKSHEETS