Listening **6** 46 Listen to a structural engineer describing the dimensions of two beams: an I-shaped cross-section and a standard channel cross-section, and a rod. Complete these tables.

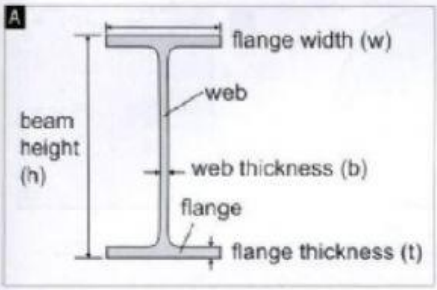

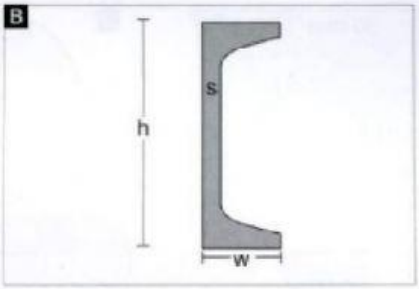

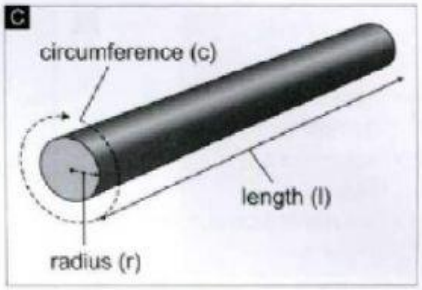

I-shaped cross-section	
Flange width:	(1) _____
Flange thickness:	(2) _____
Web thickness:	(3) _____
Beam height:	(4) _____
Area:	(5) _____

Standard channel cross-section	
Depth (h):	(6) _____
Width (w):	(7) _____
Web thickness (s):	(8) _____
Area:	(9) _____

Rod	
Radius (r):	(10) _____
Length (l):	(11) _____

Language

Expressions

Note how we say dimensions:	3.520 = *three point five two oh* 0.370 = *(nought/zero/oh) point three seven oh* (We do NOT say *three point fifty-two*, or *three point five hundred and twenty*.)
1 inch = approximately 25 millimetres	*This board is 30 × 600. = This board is 30 by 600.*

7 Write these dimensions in words.

1 2.345 2 0.146 3 35.290 4 63.38 5 3.402

Speaking **8** Work in pairs to complete these dimensions. Student A look at the information on this page. Student B look at the information on page 70.

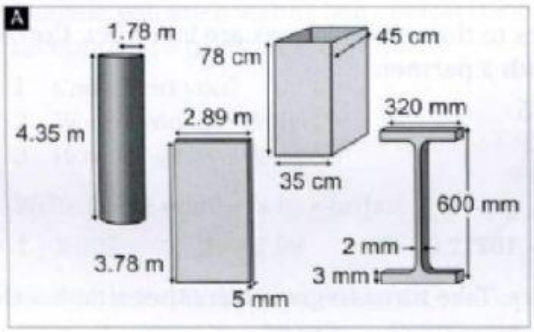

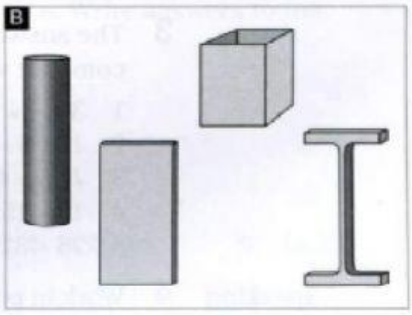

A: What are the dimensions of the rod?
B: It's 4.35 metres long. ....
A: What about the radius?
B: The radius is ....

LIVEWORKSHEETS