1 Find, colour and write.

glasses ~~handbag~~ phone keys backpack computer

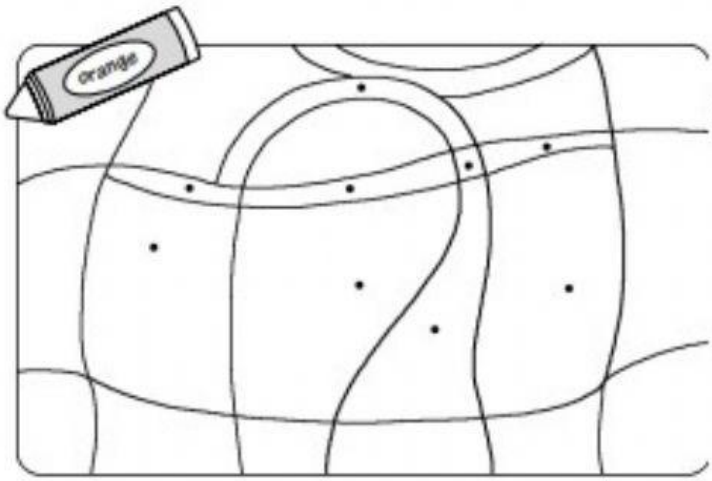

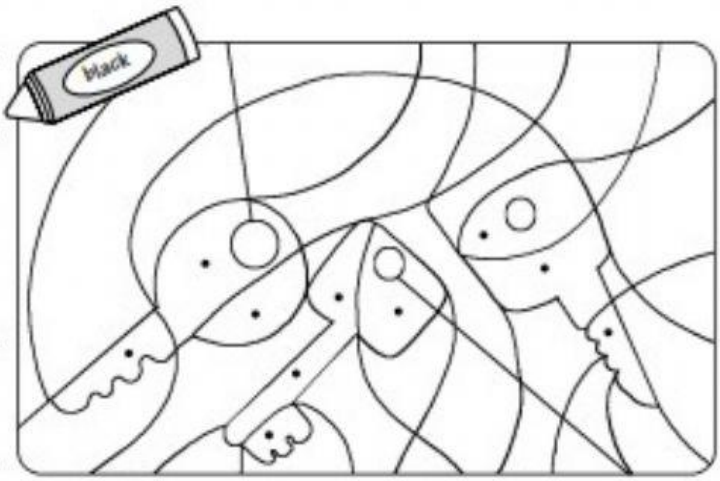

1 It's a handbag.
It's orange.

2 They're _____.
They're _____.

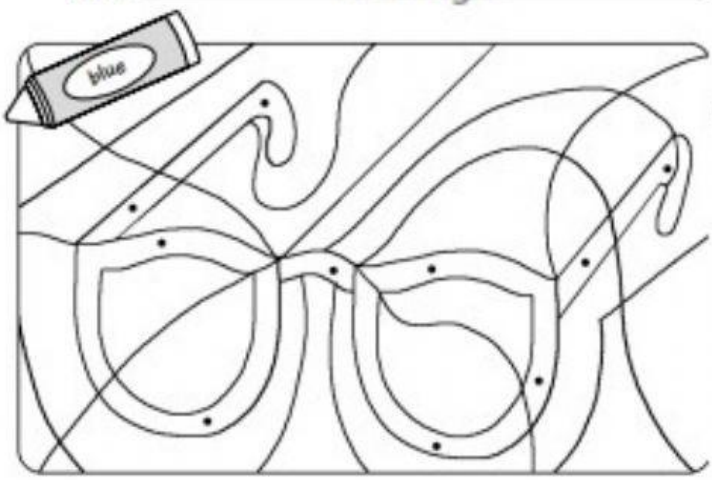

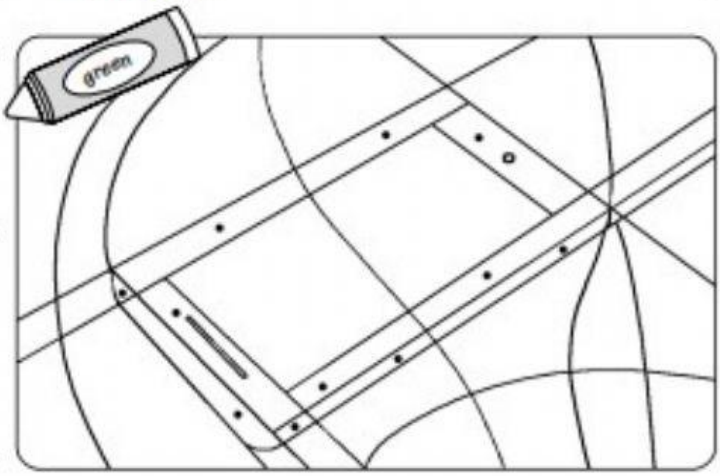

3 They're _____.
They're _____.

4 It's a _____.
It's _____.

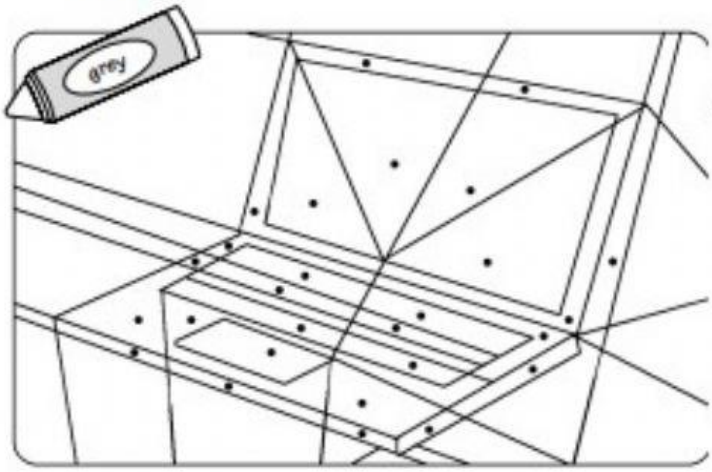

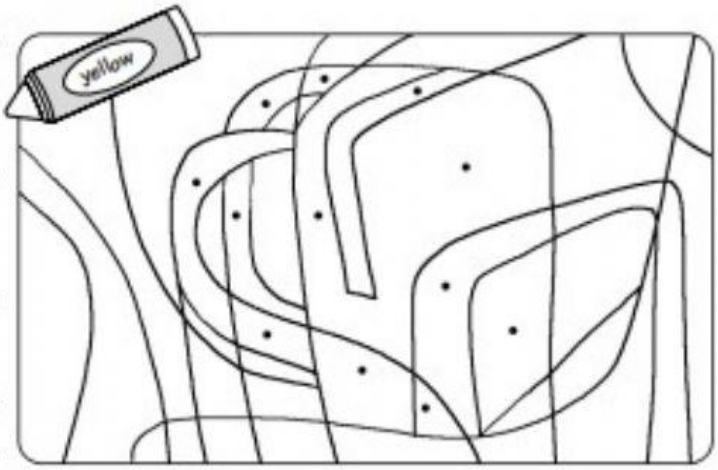

5 It's a _____.
It's _____.

6 It's a _____.
It's _____.

LIVEWORKSHEETS