SMARTS - ODI 1
MINI-TEST 2

ALLOCATED TIME: 20 MINUTES

STUDENT'S NAME: .....

NICK NAME: .....

CLASS: Smarts - ☐

1. Speaking : ☐ %
2. Listening : ☐ %
3. Reading : ☐ %
4. Grammar : ☐ %
5. Writing : ☐ %

LIVEWORKSHEETS

I. LISTENING SECTION: You will listen to each part twice, then choose the correct answer for each part.

A 16 **Listen and number.** (8 points)

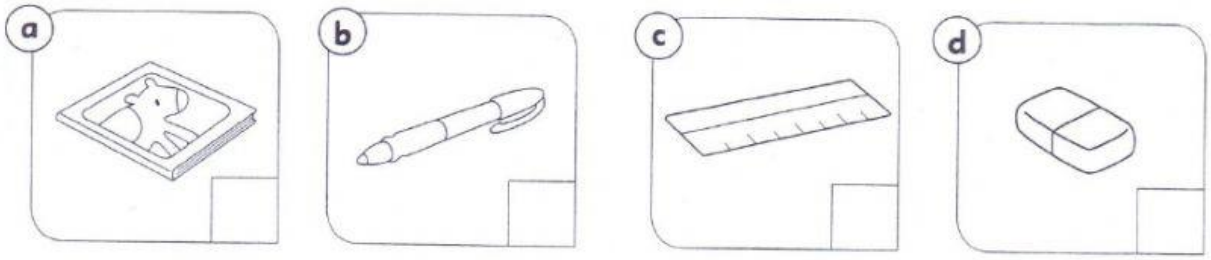

B 17 **Listen and check (✓).** (8 points)

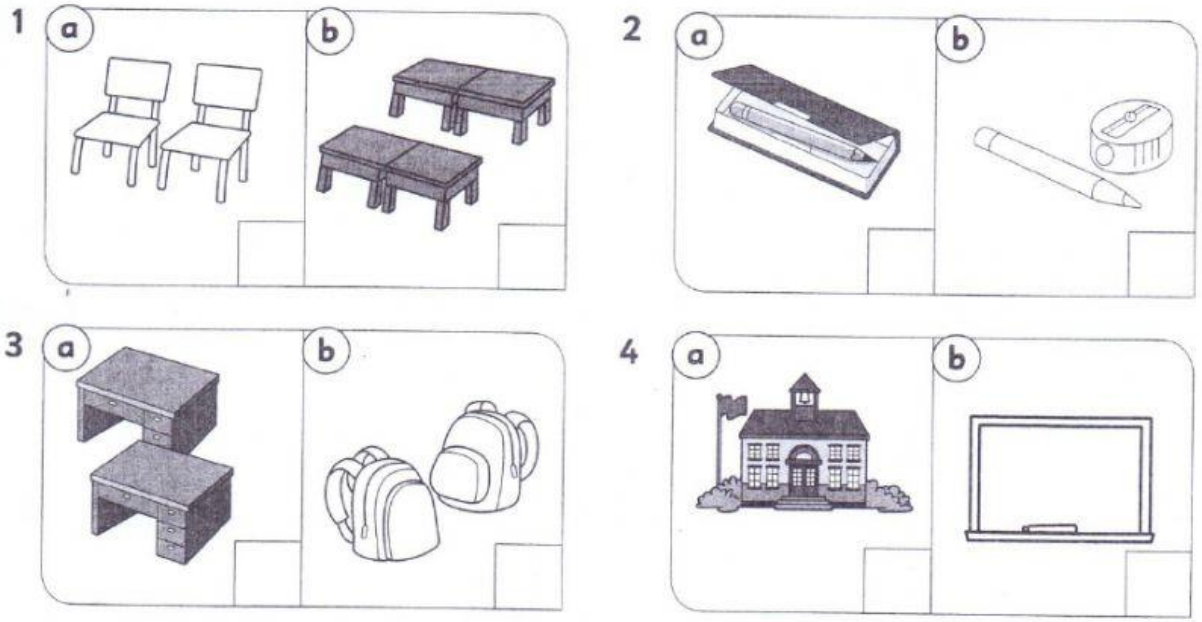

C 18 **Listen and circle.** (8 points)

1 What's this? It's a (desk / backpack).

2 It's a (pen / pencil). It's brown.

3 What color are they? They're (purple / pink).

4 What's this? It's a pencil (sharpener / case).

LIVEWORKSHEETS

D (19) **Listen and trace the letters.** (4 points)

1 i m 2 i n 3 n d 4 d n

E (20) **Listen and circle the words.** (4 points)

1 it sit 2 dip dad 3 man am 4 nap pan

Total: _____ / 32 points

LIVEWORKSHEETS

II. READING SECTION.

F Read, look, and number. (8 points)

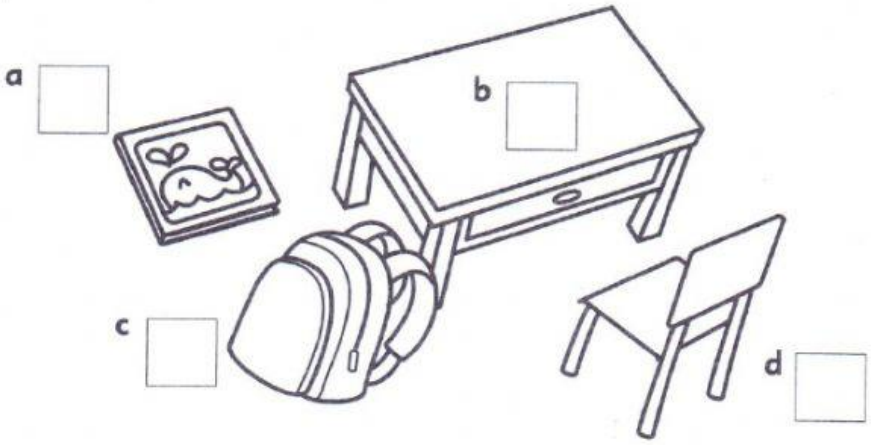

1 What's this?
It's a desk.

2 What's this?
It's a book.

3 What's this?
It's a chair.

4 What's this?
It's a backpack.

LIVEWORKSHEETS

G Read, look, and color. (10 points)

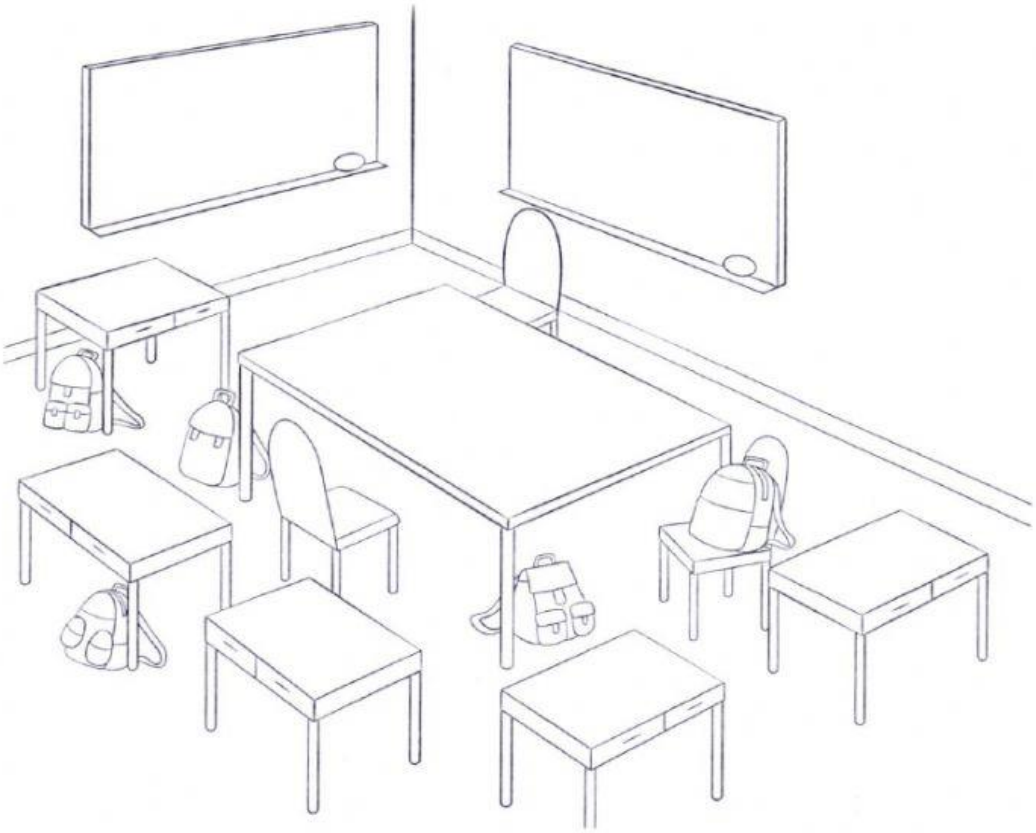

1 Look. Five desks.
They're green.

2 Five backpacks.
They're red.

3 What color is the table?
It's brown.

4 Three chairs.
What color are they?
They're gray.

5 Two boards.
What color are they?
They're yellow.

Total: _____ / 18 points

LIVEWORKSHEETS