IQ School
Primary 5

Science
Review for month of March 2022

Name: ( )	Class:	Date:
Parent's Signature:	Results: /50	%

Section A . 32pts

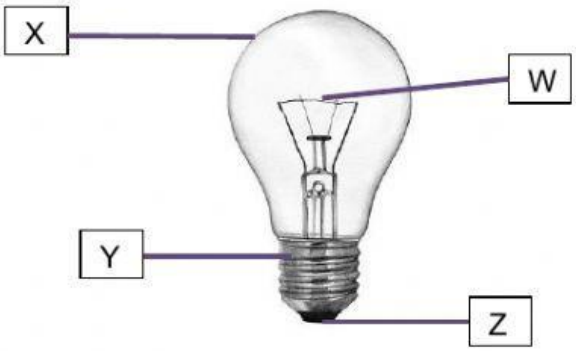

1. Which parts of the bub can conduct electricity?
   1) X and Z only
   2) Y and Z only
   3) W, X and Y only
   4) W, Y and Z only

( )

2. In which of the circuit below will bulb X be the brightest?

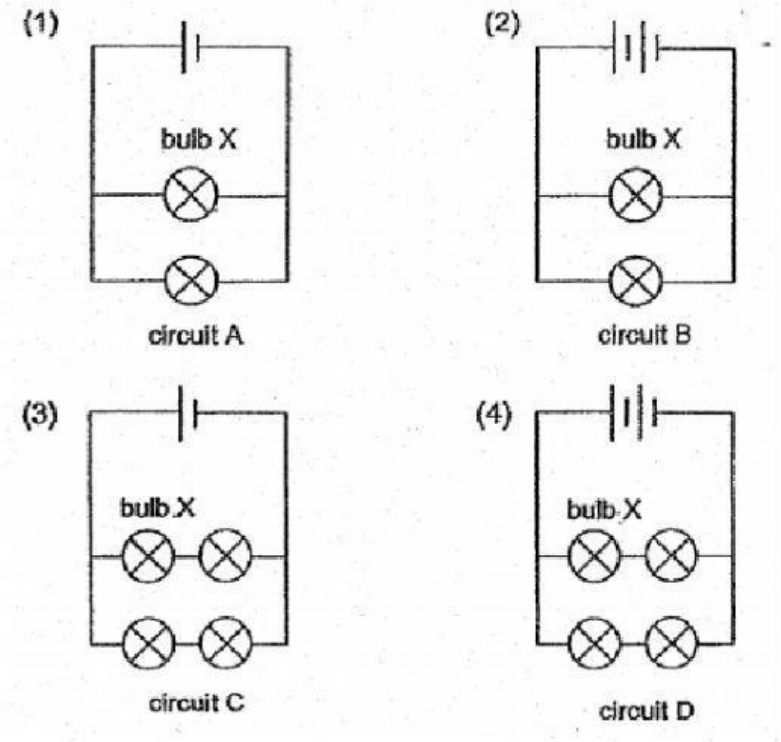

( )

LIVEWORKSHEETS

3. Study the circuit below. All the electrical components were working properly.

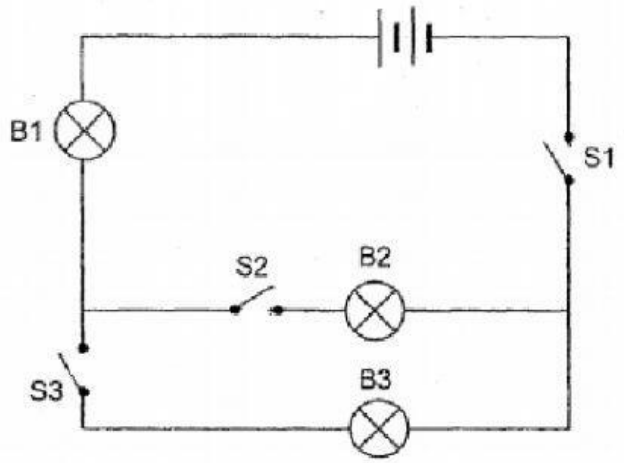

Which of the following shows the correct bulbs lighting up when the switches are opened or closed?

	Switches			Bulbs that lit up
	S1	**S2**	**S3**	
1)	closed	closed	open	B1, B2, B3
2)	closed	open	closed	Only B1, B3
3)	open	closed	closed	Only B1
4)	closed	closed	closed	Only B2, B3

( )

4. Gao Li set up 4 electrical circuits as shown below, using identical batteries, bulbs and wires.

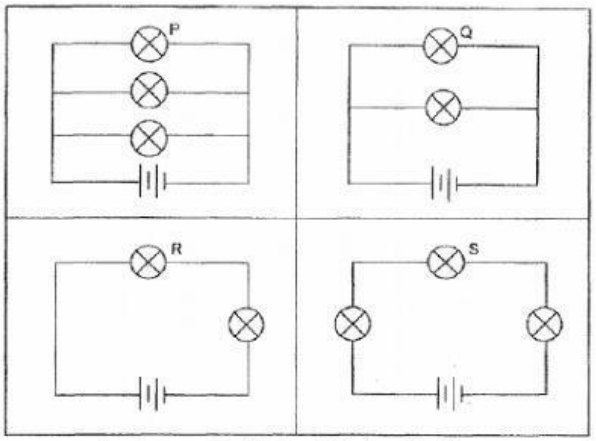

Which of the following correctly shows 3 of the labeled bulbs arranged from the dimmest to the brightest?

LIVEWORKSHEETS

	Dimmest →		Brightest
1)	P	R	S
2)	Q	S	P
3)	R	Q	S
4)	S	R	P

( )

5. Which actions below help to conserve electricity?

A Use energy-saving light bulbs.
B Use the fan instead of air-conditioning.
C Shower without the water heater on a hot day.
D Leave the television switched on for the whole day.

1) A and C only
2) A, B and C only
3) A, B and D only
4) B, C and D only

( )

6. Which statement about a battery is **incorrect** ?

1) A battery is a light source.
2) A battery is an energy source.
3) A battery has a positive terminal and a negative terminal.
4) For the chemicals in a battery to produce energy, the positive terminal must be connected to the negative terminal.

( )

7. An electric circuit is shown below.

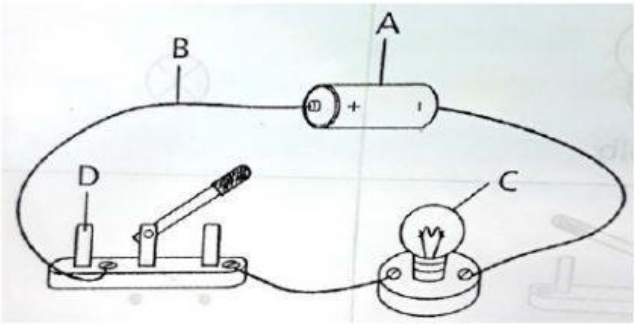

What are part A, B, C and D of the electric circuit?

	A	B	C	D
1)	Bulb	Switch	Battery	Wire
2)	Wire	Bulb	Switch	Battery
3)	Switch	Battery	Wire	Bulb
4)	Battery	Wire	Bulb	Switch

( )

8. Which statement about electricity is **Incorrect** ?

1) Fossil fuels are burnt to produce electricity.
2) Electrical appliances need electricity to work.
3) Coal is cheap, so we do not have to conserve electricity.
4) Electricity that we use at homes is produced in power stations.

LIVEWORKSHEETS

IQ School
Primary 5

Science
Review for month of March 2022

( )

Section B. 18 pts

1. Wei Jie set up an electric circuit as shown below. The bulb did not light up.

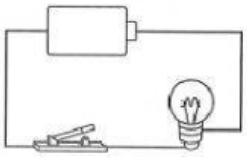

a) Why the bulb did not light up?

_____

_____

b) What could Wei Jie do to light up the bulb?

_____

_____

2. Study the flow chart below.

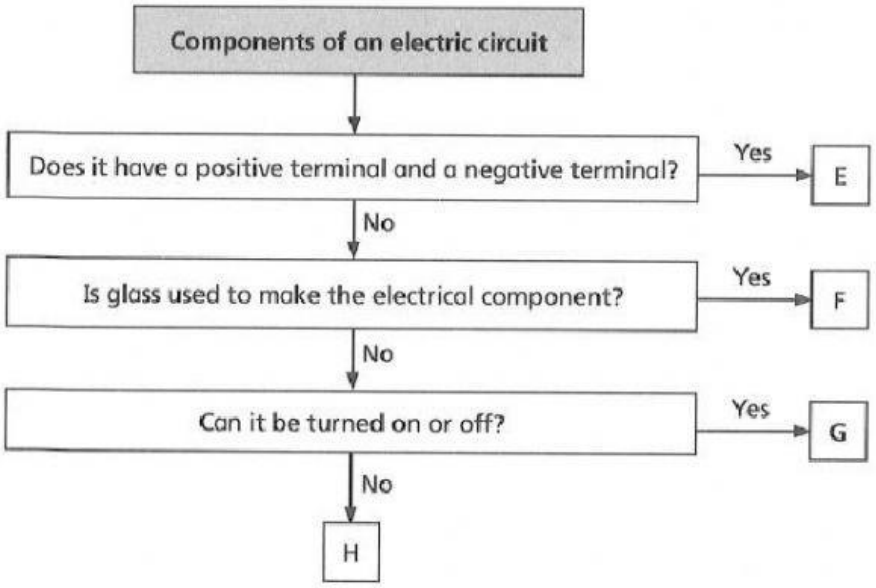

a) What are electrical components E, F, G and H?

E: _____ F: _____

LIVEWORKSHEETS

G: _____ H: _____

b) Why is glass used to make electrical component F?

_____

_____

Study the electric circuit below. All the bulbs light up.

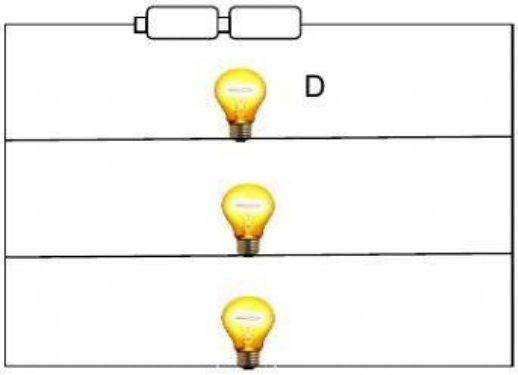

a) If one more bulb is added in the same manner to the circuit, how would the brightness of bulb D change?

_____

b) If bulb D fuses, how would the other bulbs be affected?

_____

LIVEWORKSHEETS

3. David set up an electric circuit as shown below.

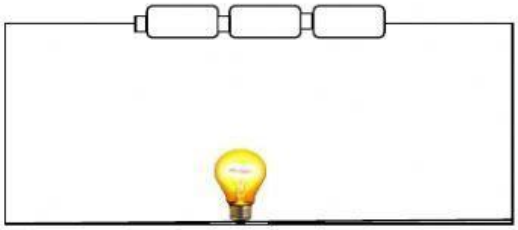

a) The bulb shines too brightly. What can David do to the number of batteries to reduce the brightness of the bulb?

_____

_____

b) Explain your answer in a)

_____

_____

********** **End of Paper** **********

LIVEWORKSHEETS

IQ School
Primary 5

Science
Review for month of March 2022

IQ/P5/S/05/Mar22/Katie

LIVEWORKSHEETS