Triple Beam Balance Practice

Record the mass show on each balance. Remember to include both the value on the beams and the unit of measurement.

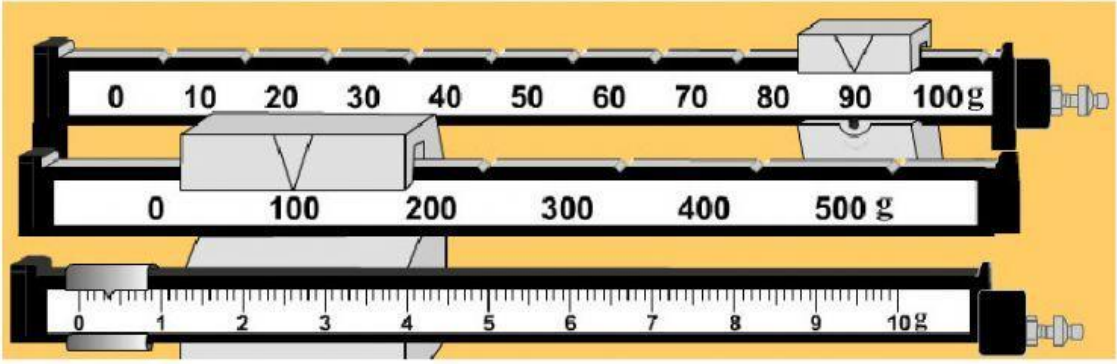

---

1. _____

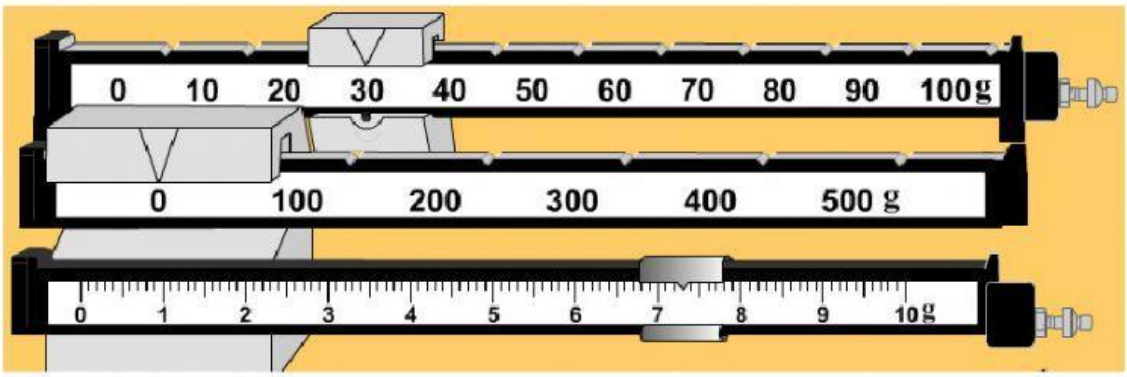

2. _____

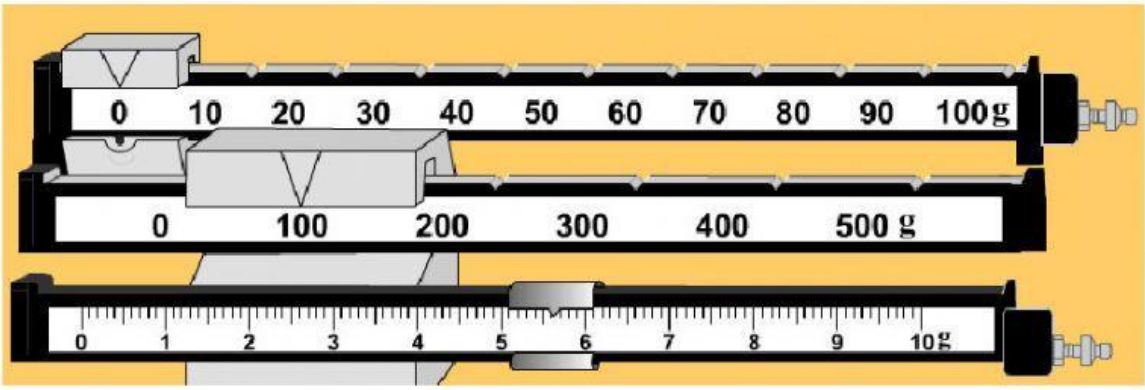

3. _____

LIVEWORKSHEETS

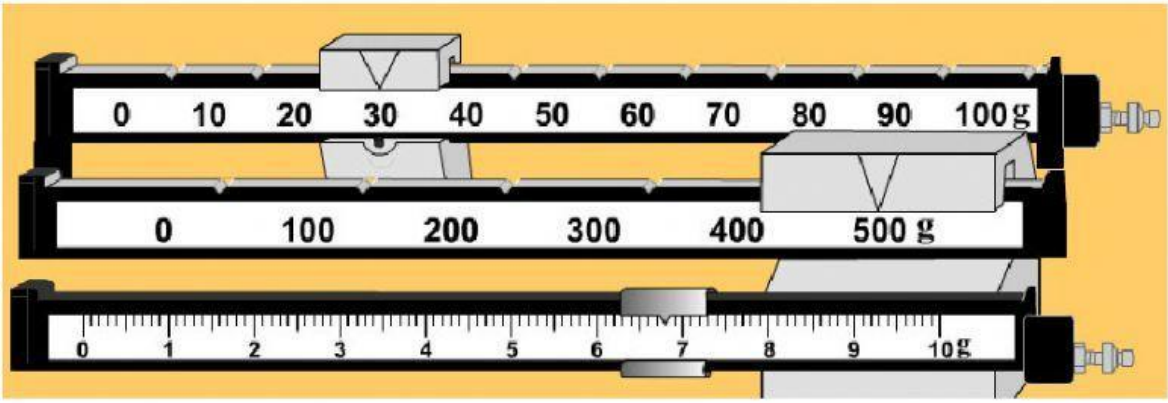

4. _____

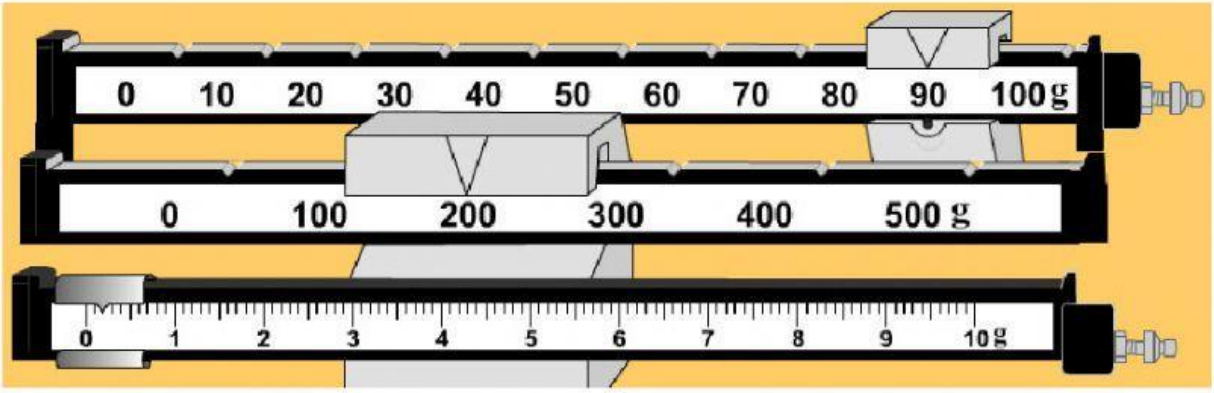

5. _____

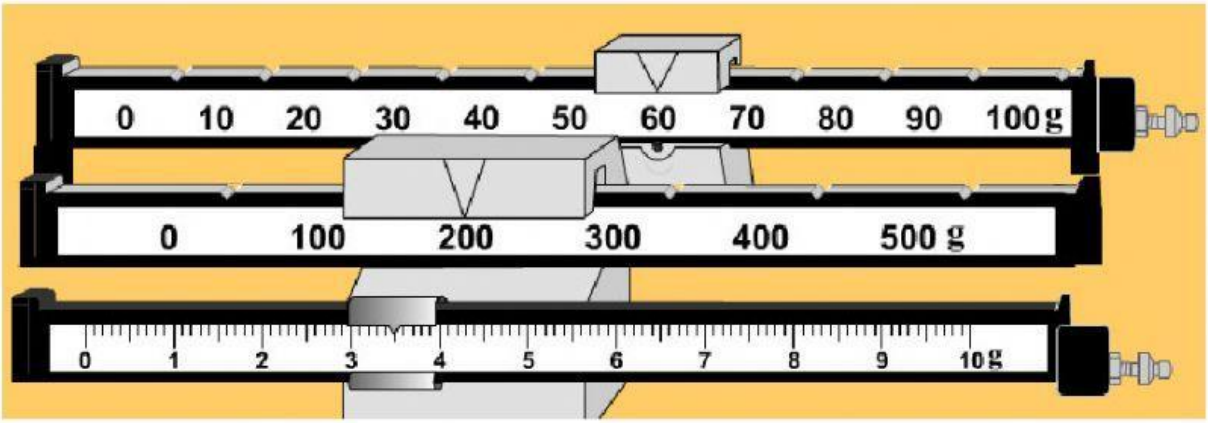

6. _____

LIVEWORKSHEETS