READING PASSAGE 2 *Questions 14–26*

You should spend about 20 minutes on Questions 14–26, which are based on Reading Passage 2 on the next page.

Questions 14–20

Reading Passage 2 has seven sections, ***A–G****.*

Choose the correct heading for each section ***A–G*** *from the list of headings below.*

Write the correct number ***i–ix*** *in boxes 14–20 on your answer sheet.*

List of headings

i Desirable job opportunities
ii Design of the jikokoa
iii The impact of rising charcoal prices
iv Benefits for the individual and the environment
v The background to stove innovations
vi Manufacture of the jikokoa
vii Training courses for BURN staff
viii Company plans
ix Affordability and availability

14 Section A

15 Section B

16 Section C

17 Section D

18 Section E

19 Section F

20 Section G

Questions 21–22

Choose ***TWO*** *letters,* ***A–E****.*

Which ***TWO*** *of the following claims are made about the jikokoa, compared to the KCJ?*

Write your answers in boxes 21 and 22 on your answer sheet.

A It's smaller in overall size.
B It's easier to control.
C It uses more fuel.
D It's less expensive to buy.
E It gives off fewer fumes.

LIVEWORKSHEETS

The design of a new cooking stove

A Cooking on charcoal is costly and damages health and forests, yet charcoal is a major cooking fuel in many countries, particularly in urban areas. In East Africa, 4.5 million urban households regularly cook on it, and that number is growing. Many attempts have been made to reduce the impacts of charcoal use by improving the efficiency of cooking stoves. One successful example is the Kenya Ceramic Jiko (jiko means stove in Swahili), or KCJ, which was developed in the 1980s. It cut charcoal use by adding an insulating ceramic liner to the traditional metal jiko.

However, most companies developing higher-efficiency stoves rely on precision manufacture in China, and this means that jobs are exported, and transport adds to the cost of a stove. In 2011, a company called BURN Manufacturing took on the challenge of designing a much cleaner and more efficient charcoal stove, and manufacturing it in Kenya. The resulting product, the jikokoa, was launched commercially in 2013.

B The jikokoa is designed for household use, and can cook a single pot of food up to 12 litres in size – the sort of quantity needed for a family of eight to ten people. It is similar in external size to the KCJ, because this is what users wanted. User opinions also led to the smart external finish in silver and black.

Inside, the jikokoa is different to the KCJ. The combustion chamber (where the charcoal burns) is much smaller, and is made of a metal alloy which can cope with high temperatures, rather than ceramic. There is an ash tray underneath the grate where the charcoal sits. Not only does this provide a clean way to collect ash, it can also be moved in and out to light the charcoal from underneath. In addition, it allows accurate control of the air flow and thus the rate of burning. Around the combustion chamber and underneath the ash tray is a thick layer of ceramic wool insulation, to cut heat loss. All parts are made to strict specifications, and components fit tightly, to minimise air leakage.

C BURN's stoves are made in a modern, continuous-flow manufacturing facility that is capable of assembling one stove per minute. In this factory, all stove components are first fabricated from raw materials. Four sub-assembly lines then combine these components into different sections (stove top, base, combustion chamber and outer casing). The final assembly line combines these four sections together, and fits the insulation around the combustion chamber. To achieve high standards, incentive payments to assembly line teams are based not just on quantity of production, but also on quality, safety and tidiness.

D High-specification materials and manufacture obviously carry a price tag: the current model of the jikokoa retails at KSh 3,800 (US$40) compared to around KSh 1,000 (US$11) for a similar-sized KCJ. However, despite savings made on charcoal use, the initial cost of the stove puts it out of reach for many low income households. BURN is therefore actively growing a network of partners who can provide loans repayable in instalments. These now represent over one third of sales. The jikokoa is also sold through conventional channels, including all four large supermarket chains in Kenya and a wide range of smaller shops.

E BURN currently employs 87 people in Kenya, and aims to be an exemplary employer. All employees are salaried, and thus get paid annual leave, sick leave and maternity pay. Women account for 53% of the workforce, and are in all types of job and at all levels, representing 46% of those employed in production, and 65% of those in administration, sales and management.

This gender equality has been achieved through fair and consistent employment practice, rather than quotas or positive discrimination. BURN makes very clear that appointment is based on merit and that all positions are open to women. Through this it has recruited both women and men to all types of job. Once in post, bonuses and promotion are given solely on the basis of performance. BURN's experience is that women work well, and they have therefore risen through the company.

F Compared to the KCJ, the jikokoa lights more easily and can cook faster, because the charcoal burns at a high temperature. In addition, the cooking rate can be controlled using the ash tray. It also looks good and is easy to carry around. Independent testing found that the jikokoa used 45% less charcoal than the KCJ, and this translates into significant financial savings for a household, typically nearly US$200 per year. Equally important is the reduction in health-damaging fumes.

Cutting charcoal use helps reduce deforestation in Kenya. The 62,000 jikokoa stoves currently in use are saving around 160,000tonnes of wood each year. Jikokoas also cut greenhouse gas emissions.

G BURN Manufacturing aims to scale-up sales rapidly in Kenya, in particular through the different microfinance routes which are making jikokoas increasingly affordable to low-income households. Pilot sales in Tanzania went well, and marked the start of expansion throughout East Africa in 2015. New jikokoa models have been designed, such as a larger version for restaurants. The Nairobi factory has space for expansion of production to meet growing demand. It is also expanding its research capacity, to localise and speed up the development of new stoves.

LIVEWORKSHEETS

Questions 23–24

*Choose **TWO** letters, **A–E**.*

*Which **TWO** of the following statements about the jikokoa are true?*

Write your answers in boxes 23 and 24 on your answer sheet.

A It is made in China.
B It can be produced very efficiently.
C It can be bought on credit.
D It comes in a range of colours.
E It is difficult to move.

Questions 25–26

Label the diagram below.

*Choose **NO MORE THAN TWO WORDS** from the passage for each answer.*

Write your answers in boxes 25 and 26 on your answer sheet.

The jikokoa

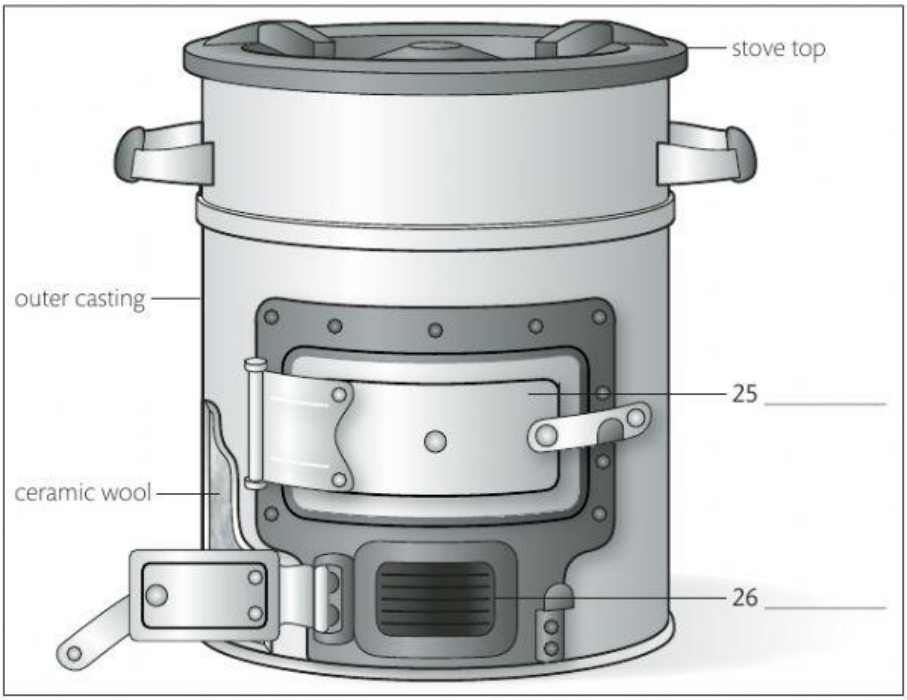

LIVEWORKSHEETS