Robot Design

Directions: Mark the correct answer for each question with a (✓).

1. Which of the following does Robot 1 do?

   A. Pushes the cube

   B. Grabs and lifts up the cube

   C. Grabs and let go of the can

   D. Lifts the can up and down

2. Which of the following does Robot 2 do?

   A. Grabs and lifts up the cube

   B. Grabs and let go of the can

   C. Lifts the can up and down

   D. Both B and C

3. Which part can grab an object?

A. 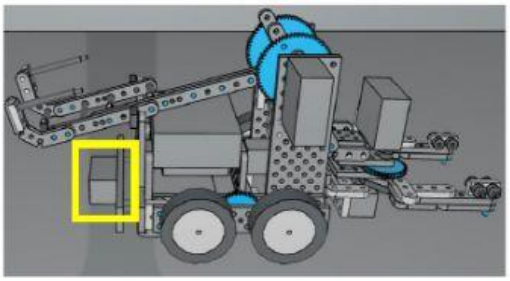

C. 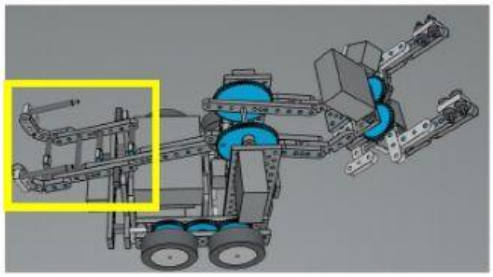

B. 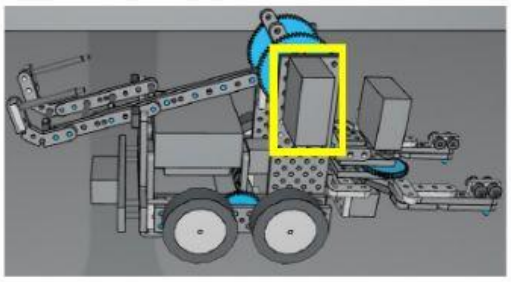

D. 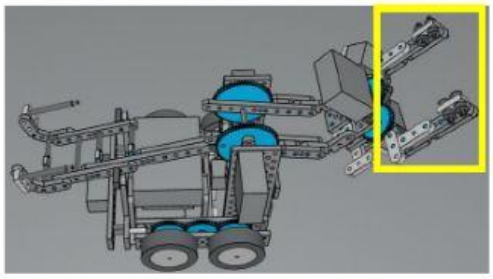

LIVEWORKSHEETS

4. Which part can smoothly push an object on a floor?

A. 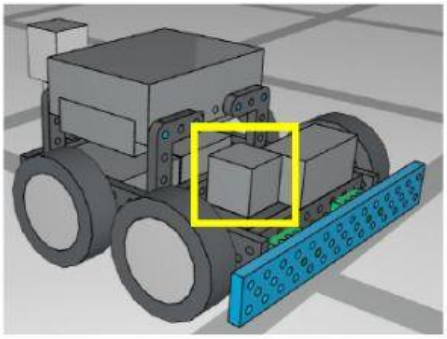

C. 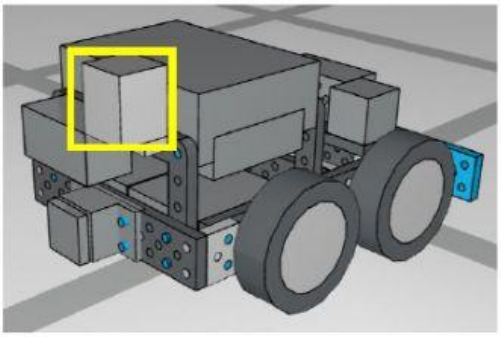

B. 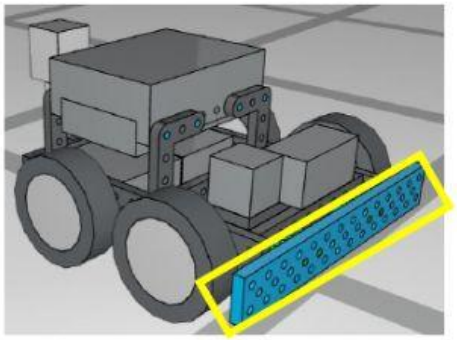

D. 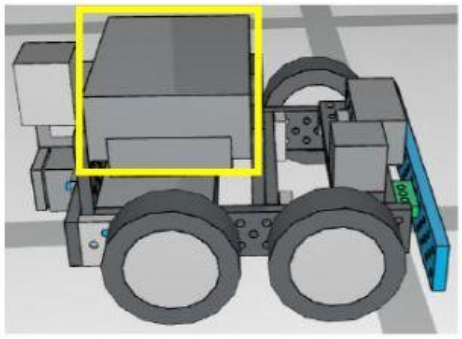

5. Which idea is best to keep in mind when designing and making a robot?

A. Simple is the best.

B. The bigger the better.

C. Form follows function.

D. Colors make objects alive.

LIVEWORKSHEETS