TLMEWORKSHEETS

Name: _____ Date: ___ / ___ / ___

Fact families

Drag the additions and subtractions and drop them in the correct house to complete the fact families.

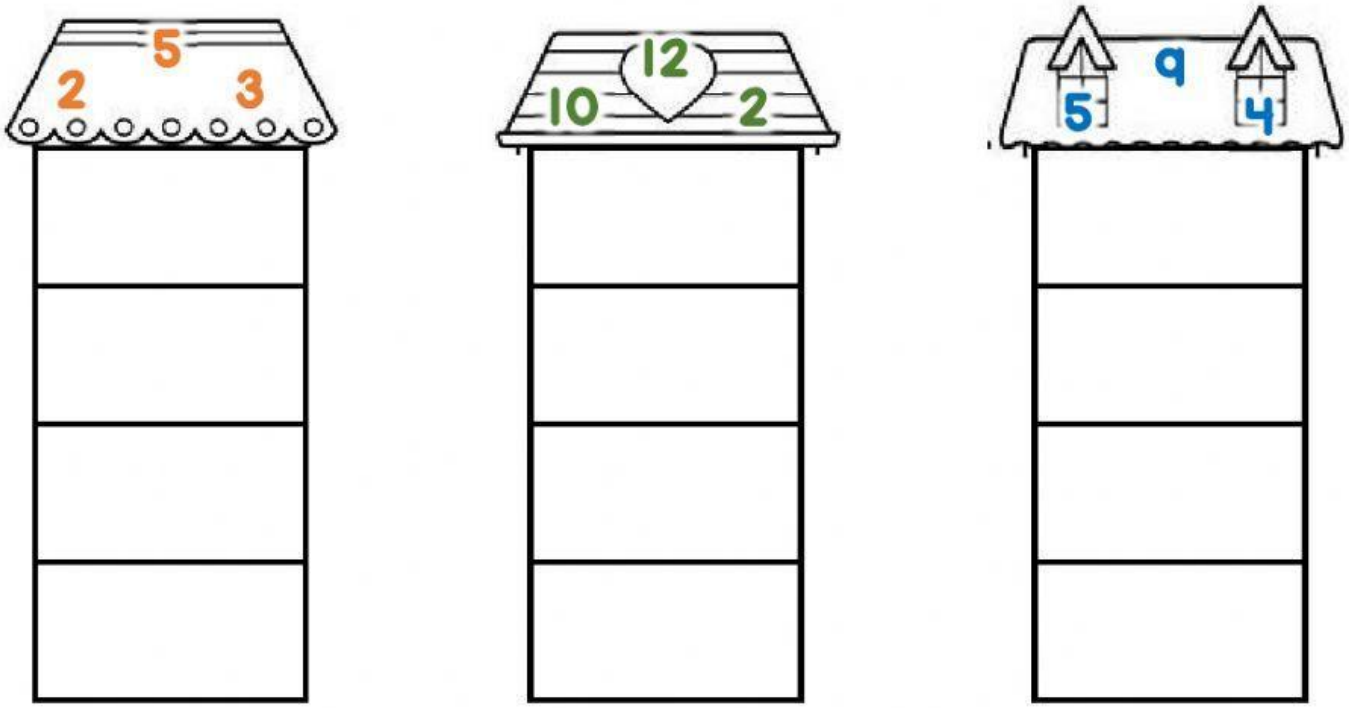

2+3=5	12-2=10	5+4=9	9-4=5
10+2=12	4+5=9	2+10=12	3+2=5
9-5=4	5-3=2	12-10=2	5-2=3