ALLFREEWORKSHEETS
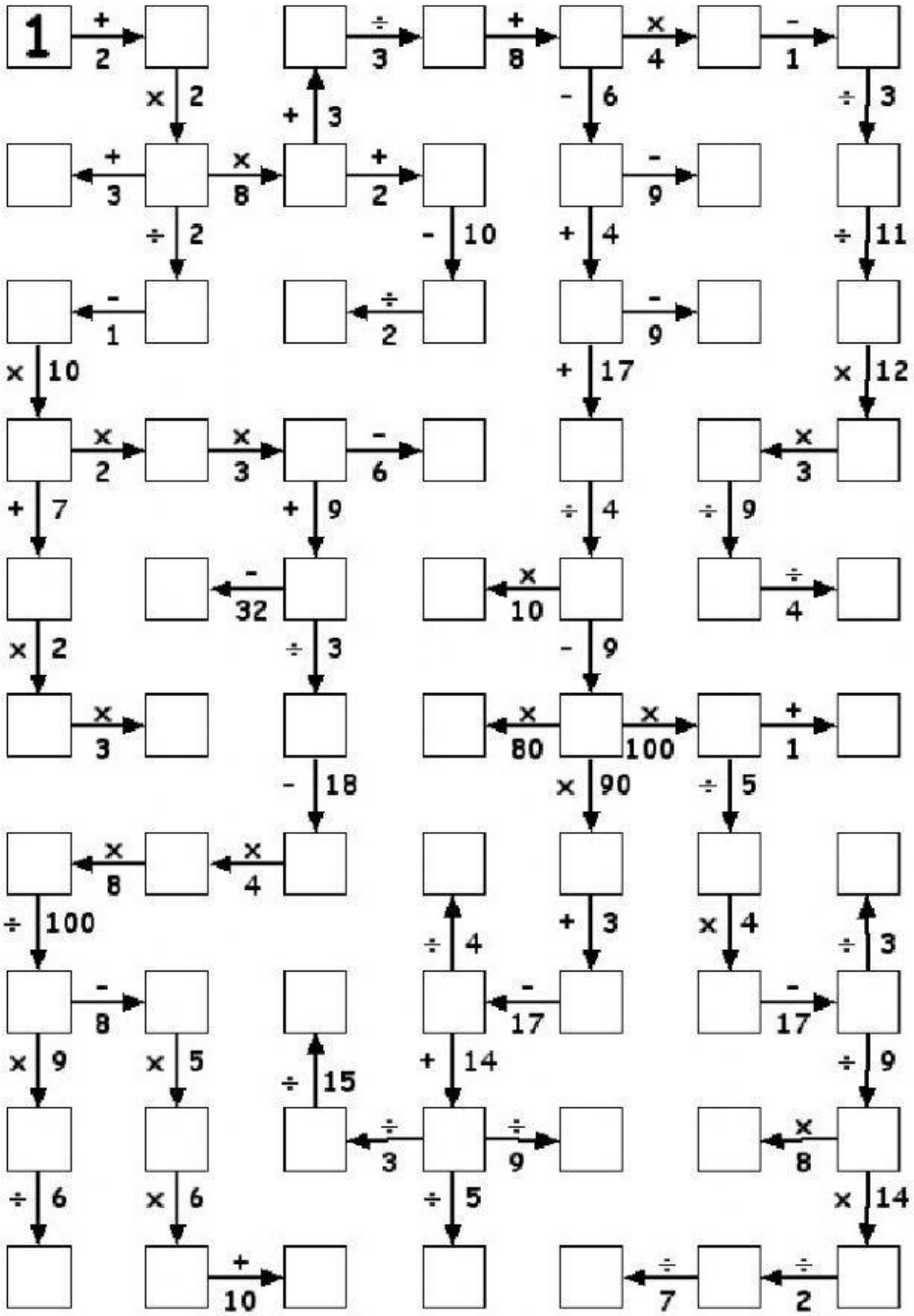
Number Snake No1