LISTEN, READ AND REPEAT

(ASCOLTA, LEGGI E RIPETI)

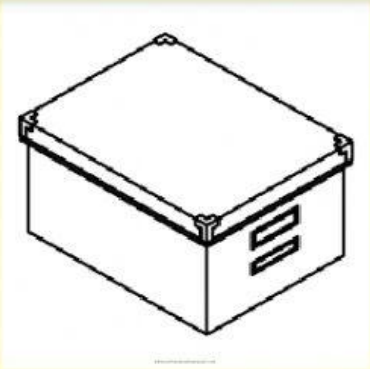

BOX

CHAIR

BED

TABLE

LIVEWORKSHEETS

WRITE (SCRIVI) IN ON UNDER

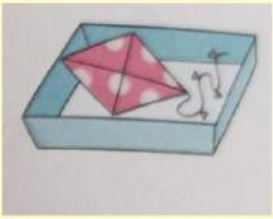

THE KITE IS _____ THE BOX

THE PEN IS _____ THE CHAIR

THE CAR IS _____ THE BED

THE SCHOOLBAG IS _____ TABLE

LIVEWORKSHEETS