GENERAL SCIENCE GRADE 8 LEAVING CERTIFICATE EXAMINATION 2017 E.C

Number of Items : 60 Time allowed 1:00 hour

Instruction : read each questions and choose carefully.

1. Conventional science relies on one of the following knowledge types

   A. Social C. Physical

   B. Spiritual D. Scientific

2. Which one of the following characteristics describe a chemical change ?

   A. No new substance is formed

   B. The change is easily reversed

   C. It is accompanied by energy changes

   D. The composition of substance is not altered

3. Which one of the following is a metallic element?

   A. Gold C. Fluorine

   B. Phosphorous D. Oxygen

4. Which one of the following is **not correct** in naming of binary compound consisting metal and non-metal ?

   A. The metal is named by its elemental name

   B. The non-metallic element is written before metallic element

   C. The last letters of non-metallic element are replaced by the suffix – ide

   D. Metallic elements with two valance is differentiated by writing its valance with Roman number in bracket

5. A Grade 8 student took an ice from deep freezer and kept it on a dish at room temperature. When he observed it after an hour, there is **No** ice but instead the dish contains water. This is due to

LIVEWORKSHEETS

A. Evaporation C. melting

B. Condensation D. sublimation

6. Unidentified physical state A. B. and C are given to you to identify based on their property as follows. Physical state A is highly and easily compressible, B does not flow and C has a less orderly arranged particle. Thus, substance

A. B is liquid C. C is solid

B. A is gas D. B is gas

7. Which of the following pure substance is correctly categorized as element or compound?

A. Sugar – element C. Nitrogen – element

B. Water – element D. Magnesium – compound

8. After balancing the following chemical equation by inspection method, the coefficient of oxygen is:

$C_2H_6O_2 + O_2 \longrightarrow CO_2 + H_2O$

A. 2 B. 4 C. 5 D. 6

9. After learning the physical properties of metals and non-metals in a class, your teacher gave you an unknown element to be identified. Then, which of the following distinguishing properties will help you categorize it as a metal or non-metal?

A. Observation C. Tasting

B. Size D. Density

10. Suppose you are given sulfur powder and iron filing mixtures to be separated. Select the best technique that you are going to use for separation?

A. Evaporation C. Magnetic separation

B. Distillation D. Sedimentation and decantation

11. Which of the following is the correct balanced chemical equation for the reaction between carbon and oxygen to produce carbon dioxide?

LIVEWORKSHEETS

A. $2C + O_2 \rightarrow 2CO_2$

B. $2C + O_2 \rightarrow CO_2$

C. $C + O_2 \rightarrow CO_2$

D. $2C + O_2 \rightarrow 2CO_3$

12. Ther are mixtures of bean, seed and teff in a container. Which of the following is the best physical means to separate them?

A. Boiling

B. Size

C. Solubility

D. Magnetism

13. Which of the following is the smallest particle of substance that can exist freely in nature?

A. Molecule

B. Element

C. Ion

D. Atom

14. Which of the following hydrocarbon belongs to alkane?

A. C_5H_{10}

B. C_7H_{12}

C. C_8H_{18}

D. C_6H_8

15. According to Aristotle:

A. Atoms exist

B. Matter is indivisible

C. The idea of atom is rejected

D. There is a limit to which matter is broken

16. Which one of the following is correct with regard to potassium ($^{39}_{19}K$)? Its

A. Mass number is 39

B. Proton number is 20

C. Atomic number is the same as its neutron number

D. Electron number is the same as neutron number

LIVEWORKSHEETS

17. Complete the missing product from the reaction:

$Na(OH) + HCL \rightarrow X + H_2O$

A. NaCl **C. Na(OH)**

B. H_2O **D. HCl**

18. Which one of the following descriptions is correct about acidic or basic oxide?

A. An acidic oxide dissolves in water to form salt

B. Basic oxides react with acids to form an acid and base

C. Acidic oxides react with bases to form salts and water

D. A basic oxide reacts with water to produce an acid and salt.

19. Which one of the following is metallic oxide?

A. Sulfur oxide C. Nitrogen dioxide

B. Potassium oxide D. Phosphorus oxide

20. Which one of the following compound is base?

A. HCL **C. NH_4OH**

B. H_2SO_4 **D. HNO_3**

21. Suppose you burned magnesium ribbon in air and collect the white powder product in crucible. You added drops of water to the powder and Shaked it. Then, red litmus paper is placed in the solution to observe color change. From this simple experiment, what should be the color of the litmus you placed in the solution?

A. Blue C. White

B. Red D. Pink

22. A microscope is needed to view:

A. Ants C. Chicken egg

B. Teff D. Onion cell

LIVEWORKSHEETS

Answer the questions number 23 based on the following figure:

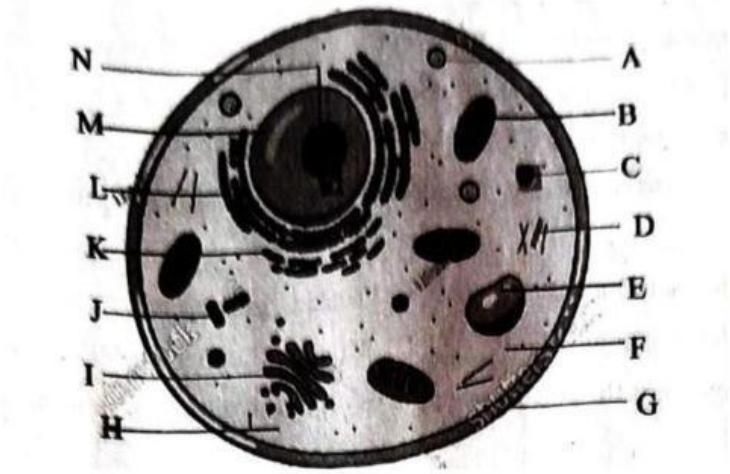

23. Which one of the following structures of a cell represented by a given letter is correctly matched with its function?

    A. E – traps light energy for photosynthesis

    B. B – for controlling activities of a cell

    C. F – Jelly like substance where other organelles found

    D. G – fully permeable and allows materials to get in and out of a cell.

24. Nerve is:

    A. A cell

    B. A tissue

    C. an organ

    D. an organ system

25. Which one of the following is a characteristic of living things to remove toxic materials and waste products?

    A. Reproduction

    B. Respiration

    C. Excretion

    D. Digestion

26. The best justification for use of scientific names than local names in science is that:

    A. Local names are internationally accepted

    B. Scientific names are made of two words

LIVEWORKSHEETS

C. Scientific names are globally the same

D. Local names **do not** vary from place to place

27. Which one of the following kingdoms is correctly paired with their distinguishing characteristics?

A. Animalia – autotrophic

B. Fungi – heterotrophic

C. Protista – prokaryotic

d. Monera – multicellular

28. One of the following is the correct example of organism with respect to the corresponding kingdom

A. Yeast – Monera

B. Toad – Plantae

C. Amoeba – Protista

D. Paramecium – Animalia

29. Angiosperms

A. Are non-flowering plants

B. Are non-vascular plants

C. lack xylem and phloem

D. have enclosed seeds

30. A fluid-filled blister caused by herpes simplex virus is :

A. Cold sore

B. Wart

C. eczema

D. acne

31. Which one of the following is not the function of human muscular system?

A. Movement of eye

B. Pumping of blood

C. Posture

D. Hearing

32. Under which system is tendon included?

A. Circulatory system

B. Skeletal system

C. Execratory

D. Muscular

33. Lack of eating fiber foods in the diet mainly causes

A. Diarrhea

B. Gastritis

C. Constipation

D. ulcer

LIVEWORKSHEETS

34. Cellular respiratory system is important in your body because it:

A. Transports food along the alimentary canal

B. Removes pathogenic microbes from the body

C. Removes oxygen and water from the body

D. Degrades glucose with the presence of oxygen

35. As part of the circulatory system, leucocytes are used for

A. Blood clotting

B. Transportation of food

C. Transportation of oxygen

D. Prevention of disease-causing agent

36. Menstruation is:

A. The time when FSH in male produces testosterone

B. The discharge of blood through vagina after menopause

C. A sequence of events usually occurring every four months during the fertile period of the women

D. The time when ovary produces matured egg due to the activities of FSH from pituitary gland

37. Which one of the following is abiotic component od an ecosystem?

A. Sunlight C. Algae

B. Protozoa D. Plant

38. In the following ocean food chain

Phytoplankton → Zooplankton → Fish → Seal → Shark

A. Phytoplankton is a primary consumer

B. Fish is a tertiary consumer

C. Seal is the fourth trophic level

LIVEWORKSHEETS

D. Shark is the last producer

39. Which one of the following is correct with regard to clay soil?

A. Has the largest pore space

B. Has larger size than sand soil

C. Holds more air than other types of soil

D. Holds relatively large amounts of water

40. The best water conservation strategy among the following is :

A. Deforestation

B. Contour ploughing

C. crop rotation

D. overgrazing

41. Which one of the following is correct with regard to components of atmospheric air?

A. Nitrogen is in highest proportion

B. The oxygen in the air is produced during respiration

C. Oxygen is less combustible

D. The amount of water vapor is the same

42. Which one of the following human activities does not cause deforestation?

A. Planting trees

B. Building homes

C. Making furniture

D. Farming activities

43. Ancient Chinese believed that the shape of the earth as:

A. An oblate sphere

B. Flat rectangular surrounded by heavens

C. Flatten at the poles and bulges in the middle

D. A flat square shape surrounded by heavens

44. In which layer of the atmosphere does life exists?

A. Mesosphere

B. Troposphere

C. Thermosphere

D. Stratosphere

LIVEWORKSHEETS

45. Which one of the following is the correct effect of rotation on earth?

A. The turn of day in to night

B. Cause of different seasons

C. Distribution of temperature

D. differences in length of the

46. Suppose you are moving a table towards you, which force is applied under this circumstance?

A. Pushing

B. Pulling

C. pushing and pulling

D. no force is required

47. Which of the following is **not** the effect of force?

A. Doing this examination

B. Stopping a moving object

C. Running in a football field to win

D. Squeezing your wet cloth after raining

48. A measuring scale on measuring device of force made of a hook attached to a spring stretching in proportion to the weight of an object is:

A. Spring

B. Hook

C. pointer

D. scale

49. Matter is changed from one form to another by using

A. Pressure

B. Energy

C. force

D. power

50. Generator changes

A. Chemical energy to light energy

B. Electrical energy to sound energy

C. Mechanical energy to electrical energy

D. Chemical energy to mechanical energy

LIVEWORKSHEETS

51. The main source of energy used for trucks in Ethiopia is:

A. Fuel
C. wind
B. Nuclear
D. solar

52. The largest family of solar system is

A. Sun
C. Asteroids
B. Jupiter
D. Mercury

Answer question number 53 based on the following model of solar system

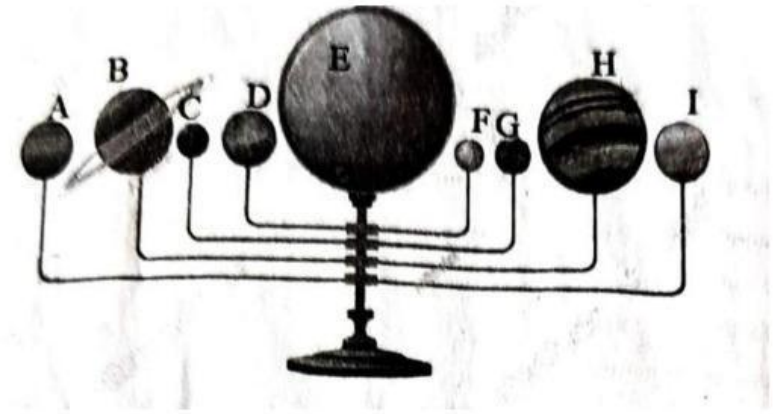

53. Jupiter is represented by letter

A. A
B. B
C.H
D. E

54. A celestial body that revolves around a planet is:

A. Star
C. satellite
B. The sun
D. moon

55. Distinguish unique characteristic of the earth

A. It has ozone layer
B. It is the third largest planet
C. It has harsh weather condition
D. Less number of life exists on it

LIVEWORKSHEETS

56. Dispersion of light

A. Is caused due to reflection

B. Causes the red color to bend less than violet

C. Is the splitting of white light into three colors

D. Causes light to travel back toward its initial medium

57. Sound is formed by:

A. Vibration

B. Refection

C. refraction

D. dispersion

58. A mechanism of heat transfer from the hotter part of an object to its colder part is

A. Radiation

B. Convection

C. conduction

D. refraction

Answer question 59 based on the following simple circuit diagram

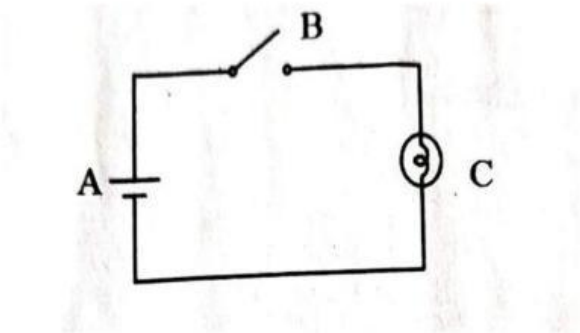

59. Letter C represents

A. Switch

B. Bulb

C. Fuse

D. Resistor

60. The phenomenon where objects are attracted or repelled is referred to as:

A. Magnets

B. Magnetism

C. electricity

D. circuit

LIVEWORKSHEETS