Name _____ **Date** _____

Unit 1 Numbers and the number system

1 Write the missing number.

4000 is one hundred more than _____.

2 Fill in the empty boxes in this sequence.

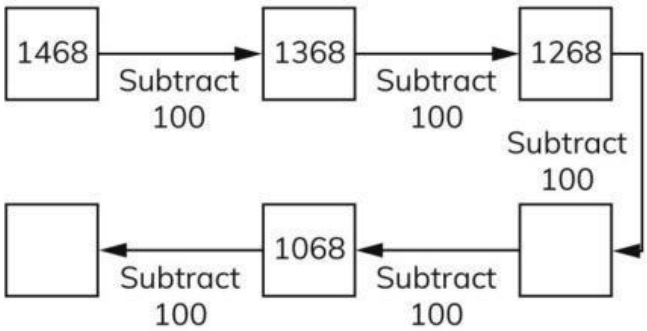

3 Here is part of a number sequence.

The numbers increase by the same amount each time.

. . . 350, 355, 360, 365, 370, 375, . . .

The sequence continues in both directions.

Circle all the numbers below that will appear in the sequence.

45 54 65 605 506

4 Leo makes a number pattern and describes it to his friend, Ben. Leo says:

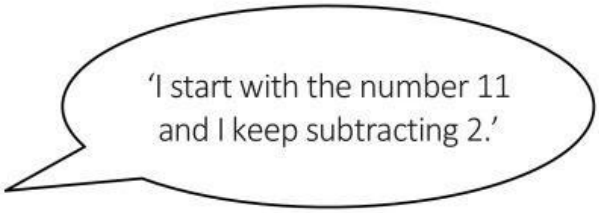

Ben writes down the first four numbers in the sequence correctly.

Circle the sequence that Ben writes.

11, 10, 8, 6 11, 13, 15, 17 11, 9, 7, 5 11, 10, 9, 8

LIVEWORKSHEETS

5 Here are some temperatures.

4 °C −3 °C 5 °C 0 °C −2 °C

a Which is the warmest temperature? _____

b Which is the coldest temperature? _____

6 Saeed describes a number.

He says, 'It has 4 tens. It has 9 thousands. It has 7 ones. It has 0 hundreds.'

Write the number Saeed describes.

7 Fill in the missing number.

9087 = 9000 + _____ + 7

LIVEWORKSHEETS