Activity 4

Name:

Grade:

Rank these circuits below.
Starting with the brightest bulb and ending with the dullest bulb.

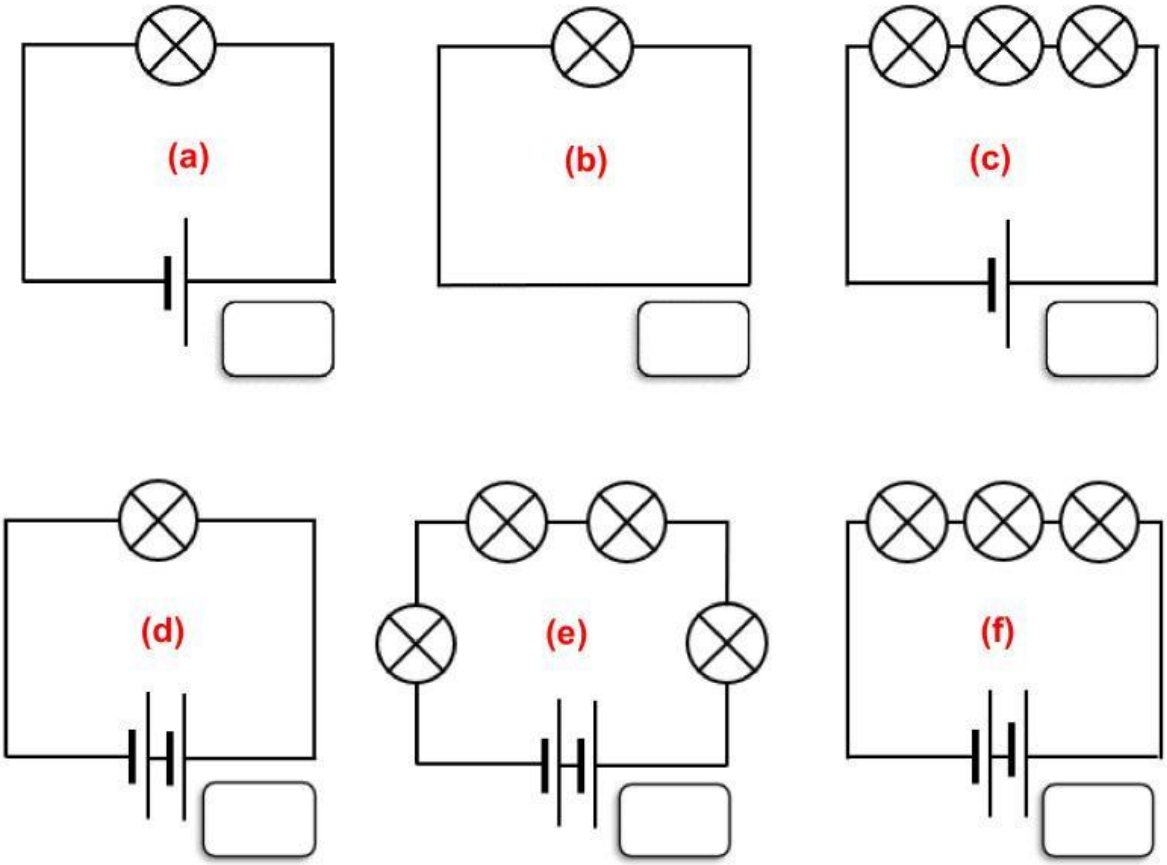

Give a reason(s) to your answer.

LIVEWORKSHEETS