NAME:

COMPARATOR CIRCUITS

IDENTIFY WHERE THE BULB WILL BE LIT

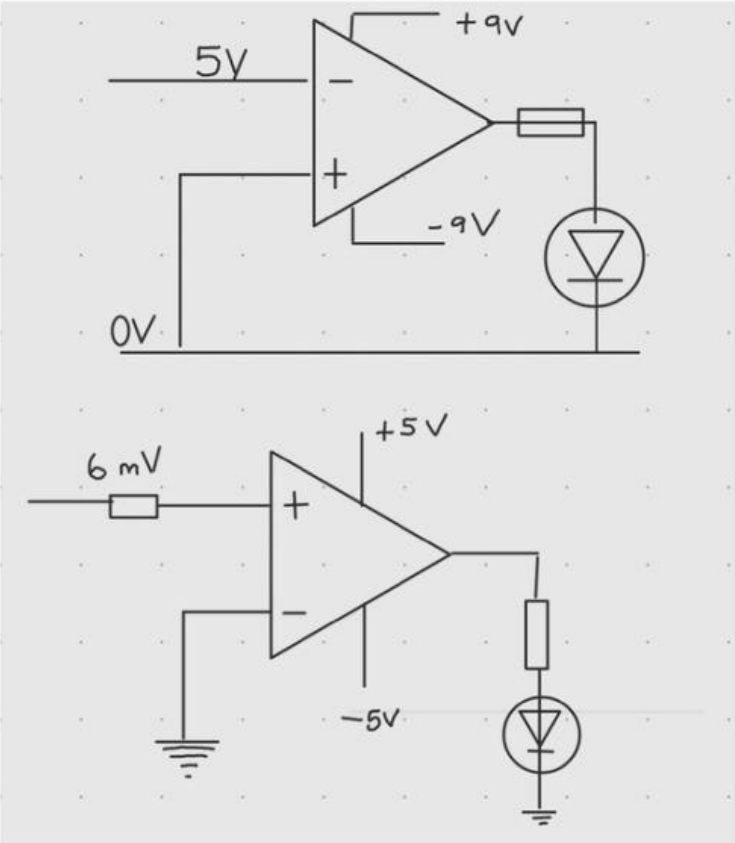

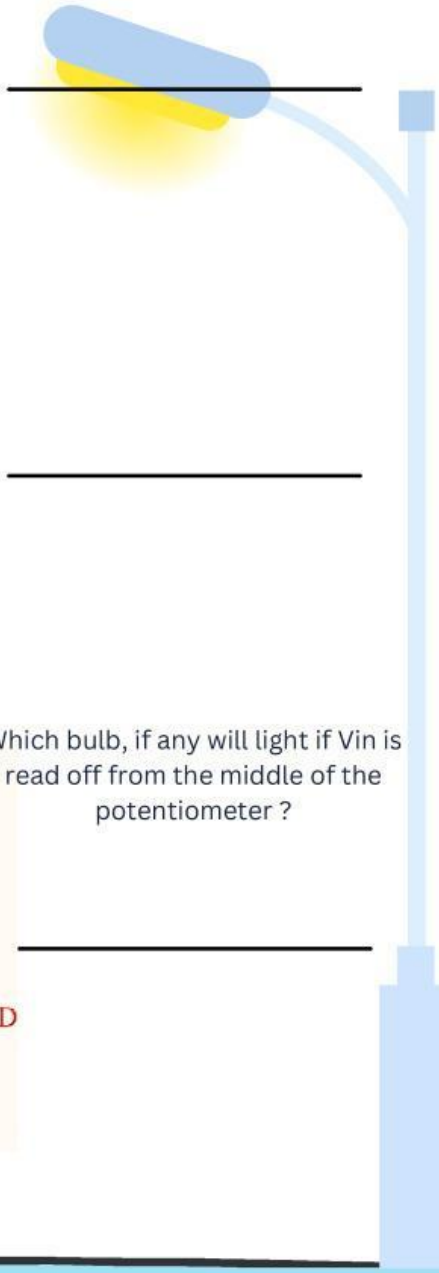

A

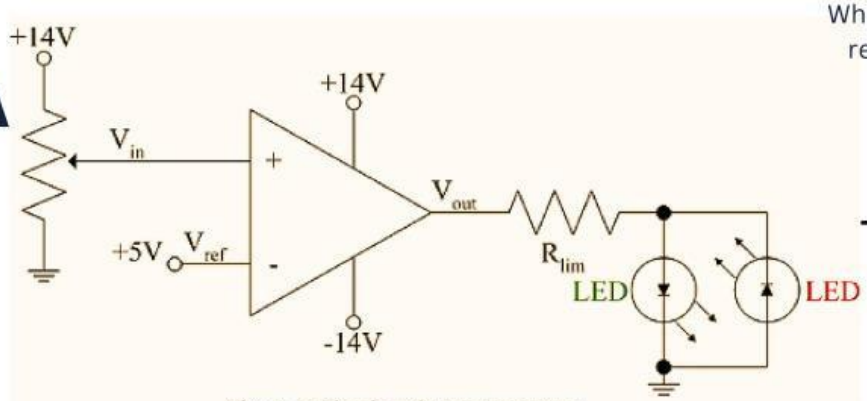

Figure 1: Simple voltage comparator

Which bulb, if any will light if Vin is read off from the middle of the potentiometer ?

A

Picture Source

LIVEWORKSHEETS