Phonic 2

Name : _____

Date : _____

TRUNG TÂM ANH NGỮ
MOON & SUN
Learning through playing

MINI TEST 3 – PHONIC....

No	Questions	Good	Need to be improved	Note
1	What's your name?			
2	How are you?			
3	How old are you?			
4	Can you spell your name?			
5	What toys do you like?			
6	Do your like.....?			
7	What is your favorite color?			
8	Can you put the..... on – in – under – behind - next to - the box 1 2 3 4			Vocabulary
9	Vocabulry 1 2 3 4 5 6 7 8			
10	Speaking with picture: 1 2 3 4 5 6			

II. Personality and character.

DESCRIPTION	GRADING SYSTEM (Bảng đánh gia)				
	Outstanding	Very good	Good	Satisfactory	Need improvement
Understanding (hiểu biết)					
Reflection (Phản xa)					
Pronunciation (phát âm)					

Teacher comment:

Teacher sign

Good at.....

Need to improved at.....

Need to pay attention at.....

LIVEWORKSHEETS

Test

Phonic 2 - Speaking

TRUNG TÂM ANH NGỮ
MON & SUN
Learning through playing

Vocabulary

① 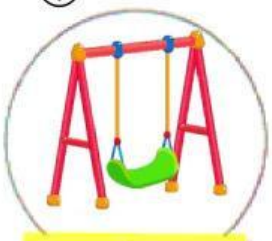
swing

②
seesaw

③
slide

④
teddy

⑤
door

⑥
bookcase

⑦
chair

⑧
table

Speaking

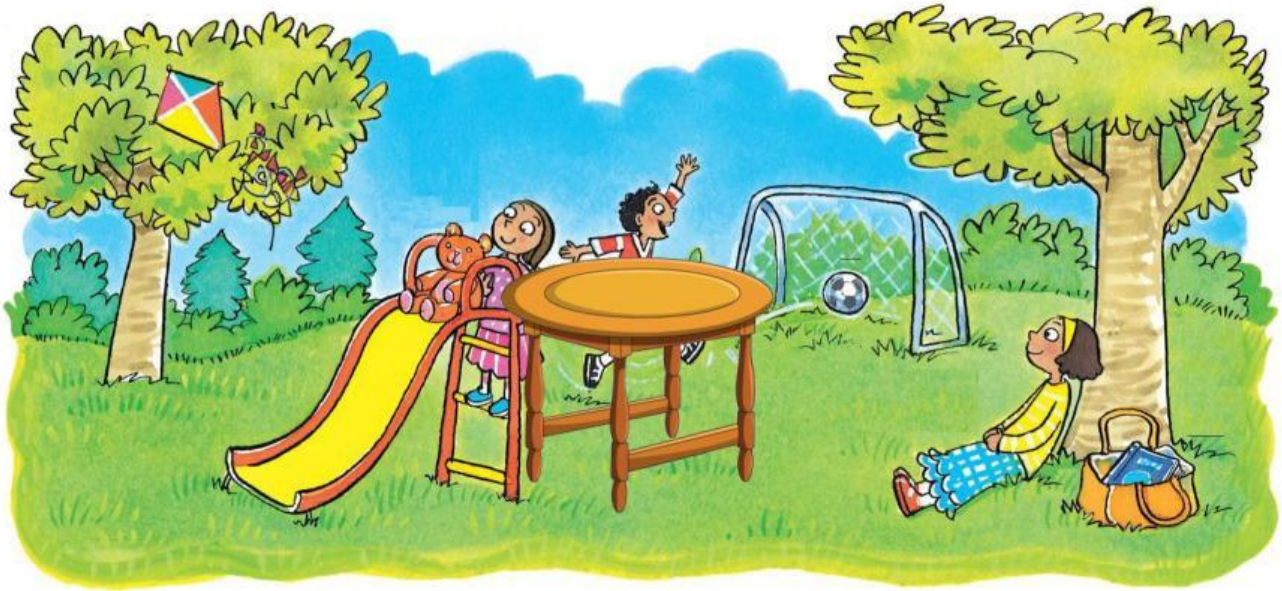

1. Where is the bag?
2. Is the teddy on the car?
3. Where is the kite?
4. How many girls are there?
5. Is the boy sad?
6. Where is the book?

LIVEWORKSHEETS

Name : _____ Class : _____

Date : _____ Teacher : _____

TRUNG TÂM ANH NGỮ mon&sun Learning through playing

I. Look and write

Guitar	teddy	car	balloon
Seesaw	train	slide	swing

① 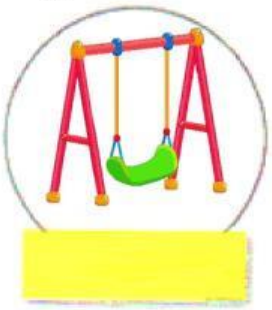

② 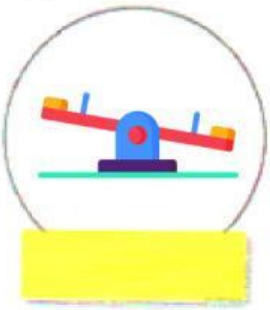

③

④

⑤

⑥

⑦ 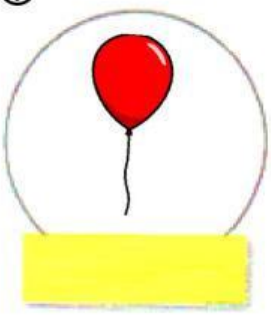

⑧

II. Write the words in the correct order. Then match.

1 What's your name?

2 Who's this?

3 How are you?

4 How old are you?

5 How many books?

is Mary This

This is Mary _____.

name's My Tom

_____.

six I'm

_____.

books Five

_____.

you fine I'm thank

_____ fine.

LIVEWORKSHEETS

III. Match

These are

This is

VI. Complete the text with *in*, *on* or *under*.

1 The ball is in the net.
2 The umbrella is _____ the seesaw.
3 The teddy is _____ the pool.
4 The girl is _____ the slide.
5 The car is _____ the seesaw.

V. Mark the correct answer (✓).

1

- He's under the slide. ☐
- He's on the slide. ☐
- She's on the slide. ☐

2

- It's under the net. ☐
- It's on the net. ☐
- It's in the net. ☐

3

- He's under the tree. ☐
- It's under the tree. ☐
- She's under the tree. ☐

4

- She's in the pool. ☐
- It's in the pool. ☐
- He's in the pool. ☐

LIVEWORKSHEETS

VI. Read and color.

❶ Color the book. It's green.

❷ Color the bag. It's gray.

❸ Color the crayon. It's red.

❹ Color the notebook. It's orange.

❺ Color the pencil case. It's yellow.

❻ Color the ruler. They're blue.

❼ Color the pencil. It's yellow.

❽ Color pen. They're blue.

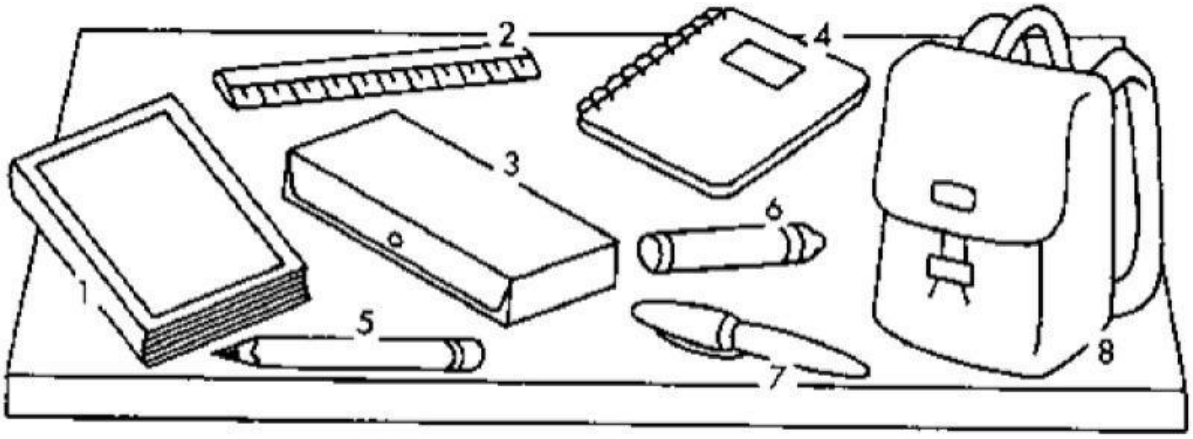

VII. Write the word in correct order.

❶ many | How | are | there? | pens — **How many pens are there?**

❷ crayons | two | are | There | . — .....

❸ are | many | there? | tablets | How — .....

❹ Do | have | you | books? — .....

❺ there? | many | are | How | rulers — .....

❻ don't. | I | No, — .....

❼ I | Yes, | do. — .....

LIVEWORKSHEETS

VIII. Complete the sentences with *in*, *on* or *under*. /4

1

My sister is on the swing.

2 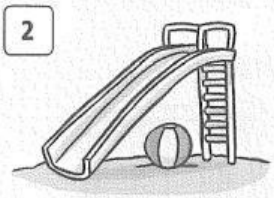

The ball is _____ the slide.

3

My brother is _____ the pool.

4

The apple is _____ the hat.

5 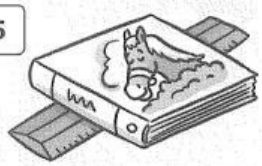

The ruler is _____ the book.

XI. Match. /5

1 o

2 s

3 z

4 p

5 u

6 y

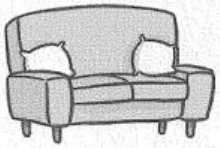

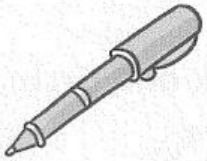

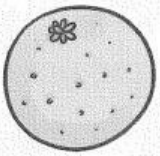

LIVEWORKSHEETS

Listening

TRUNG TÂM ANH NGỮ
MOON & SUN
Learning through playing

1 Listen and circle the sound you hear. 156 /5

a b c d e f g h i j k l m n o p q r s t u v w x y z

2 Listen. Tick (✓) or cross (x). /4

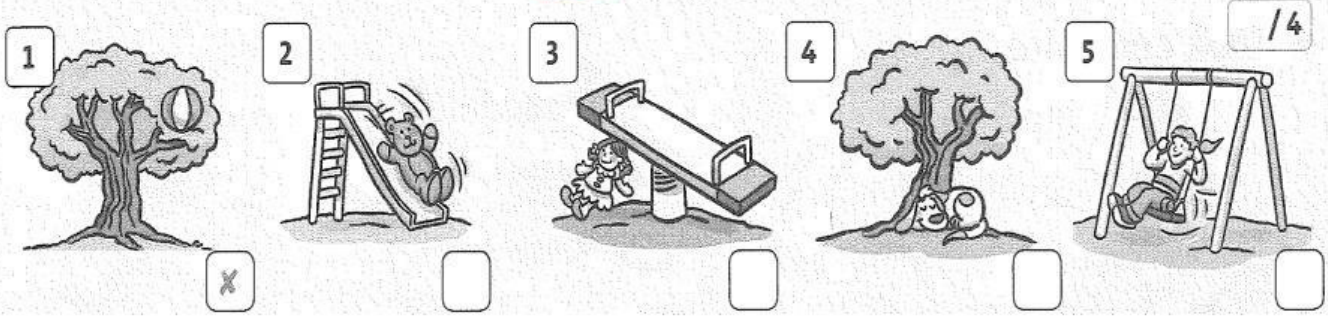

3. Listen and circle the sound you hear. 155 /4

1 r z p t 2 z s t p

3 e o u v 4 m r t n

5 w u v r

/25

LIVEWORKSHEETS