Calculations

36. If you exert a force of 20 newtons on a can opener, and the opener exerts a force of 80 newtons on the can, the ideal mechanical advantage of the can opener is _____

37. 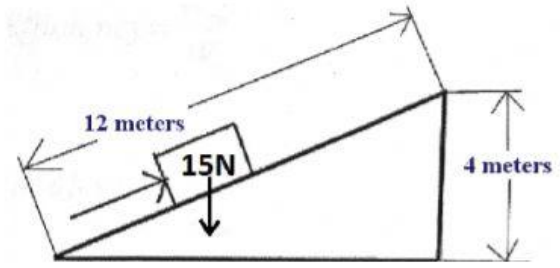

The Ideal Mechanical Advantage of the ramp is _____.

38. 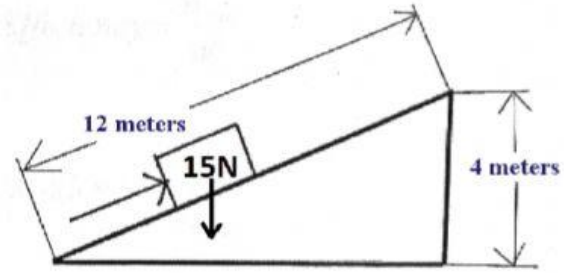

Assume that this ramp is an Ideal Machine. The force required to slide the box up the ramp would be ___**N**_.

39. 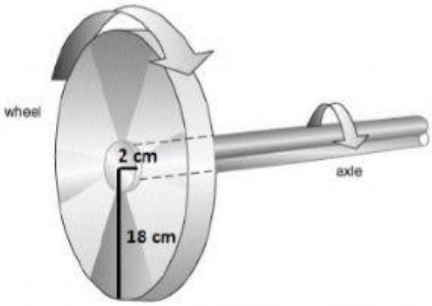

THE WHEEL AND AXLE IS A WHEEL CONNECTED TO A RIGID POLE.

The Mechanical Advantage of the Wheel and Axle pictured is _____.

40. 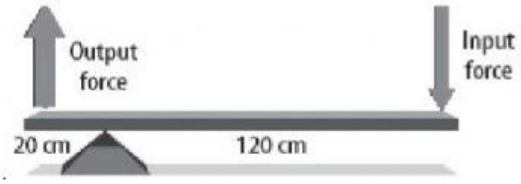

The Mechanical Advantage of the lever in the picture is _____.

LIVEWORKSHEETS