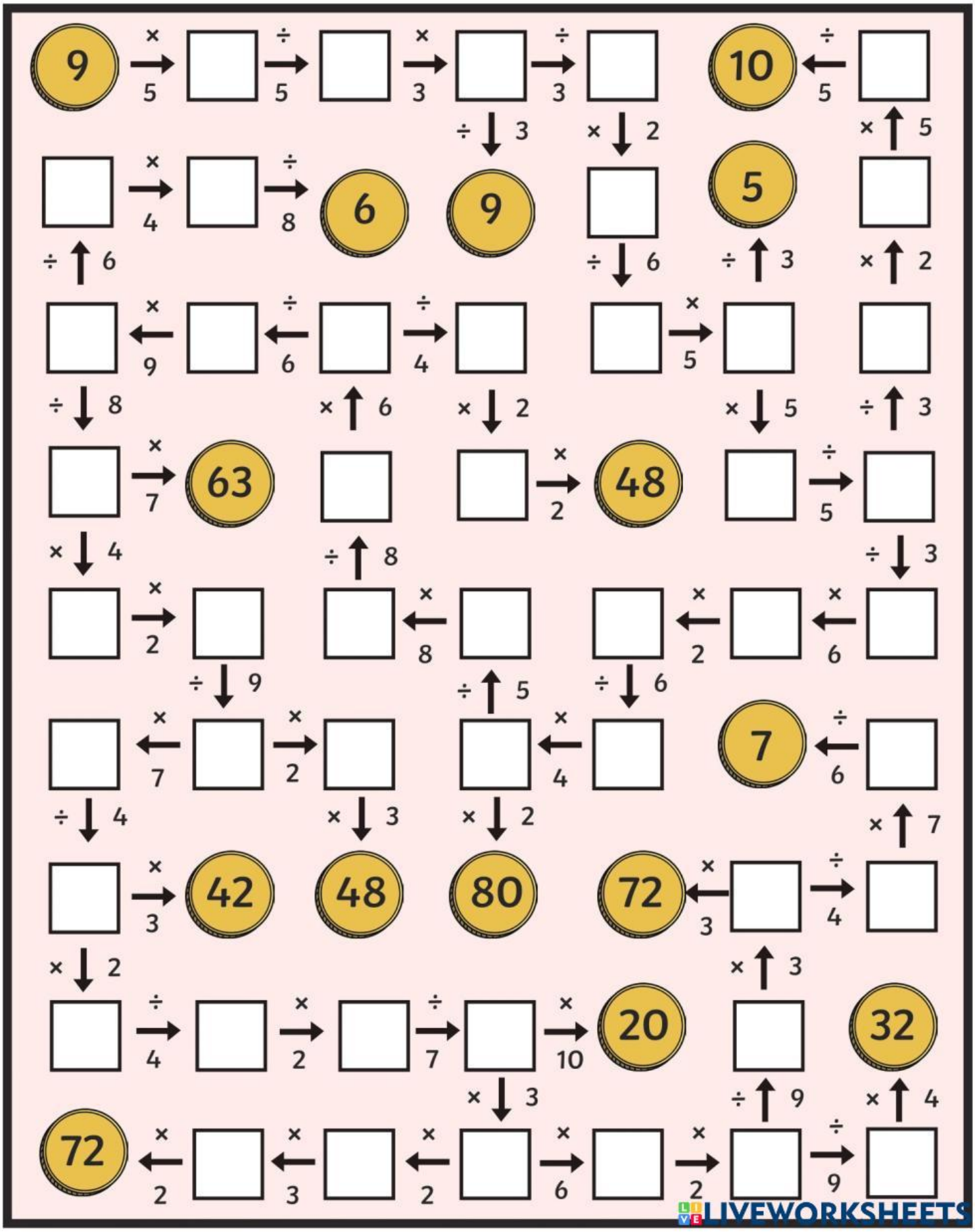

LIVEWORKSHEETS