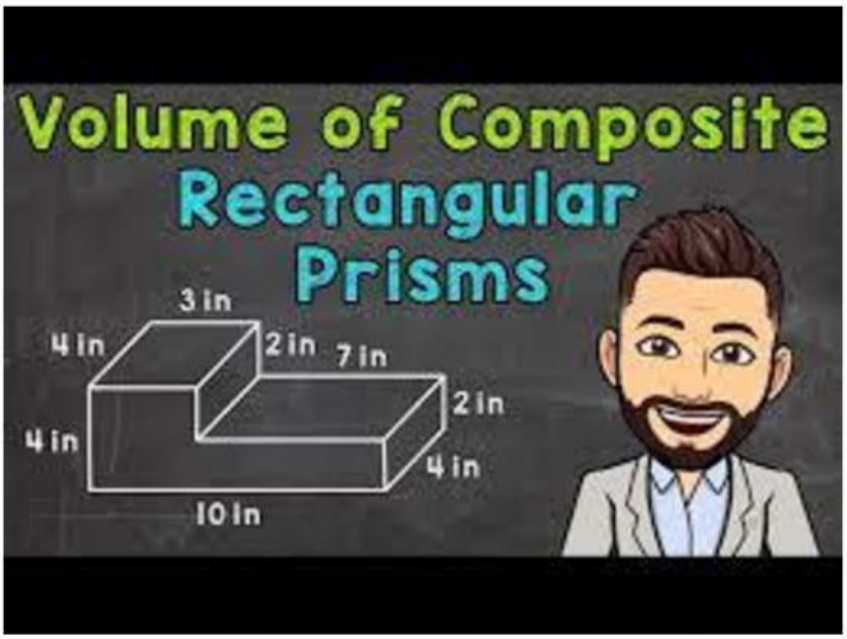

pixtastock.com - 24910489

LIVEWORKSHEETS

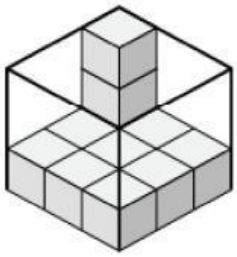

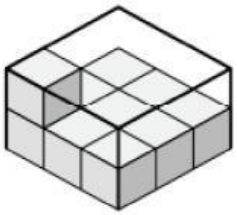

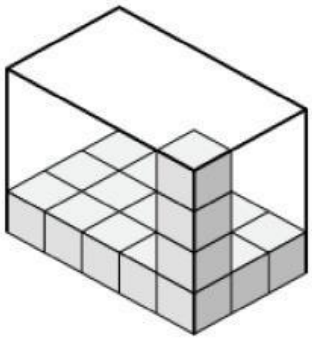

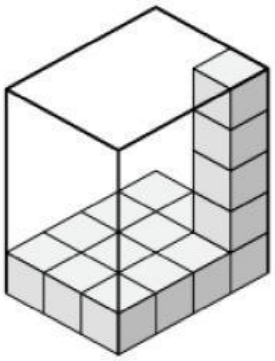

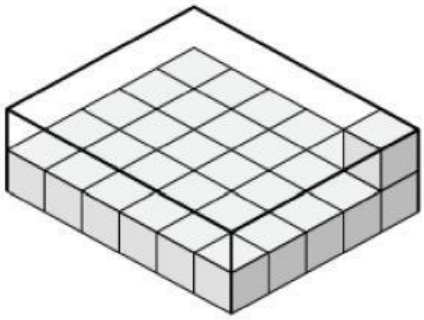

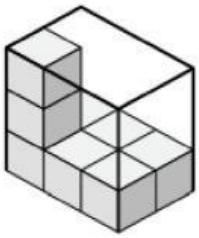

LIVEWORKSHEETS

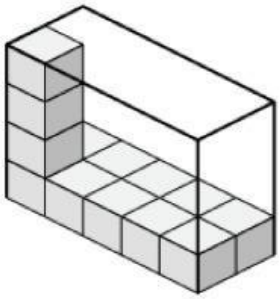

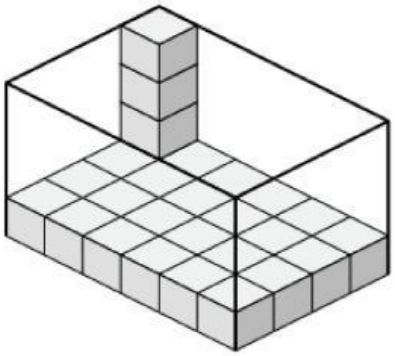

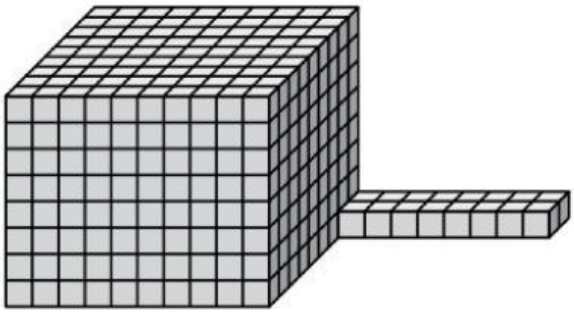

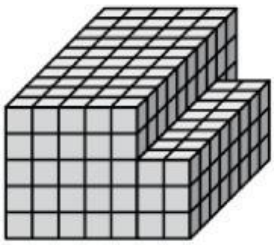

LIVEWORKSHEETS

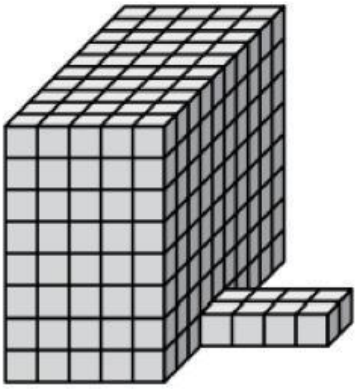

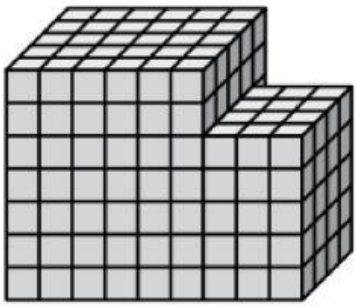

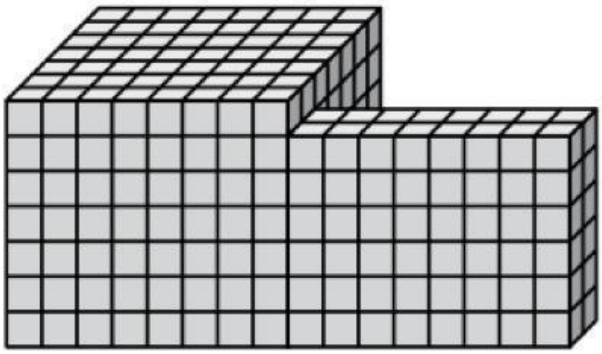

LIVEWORKSHEETS

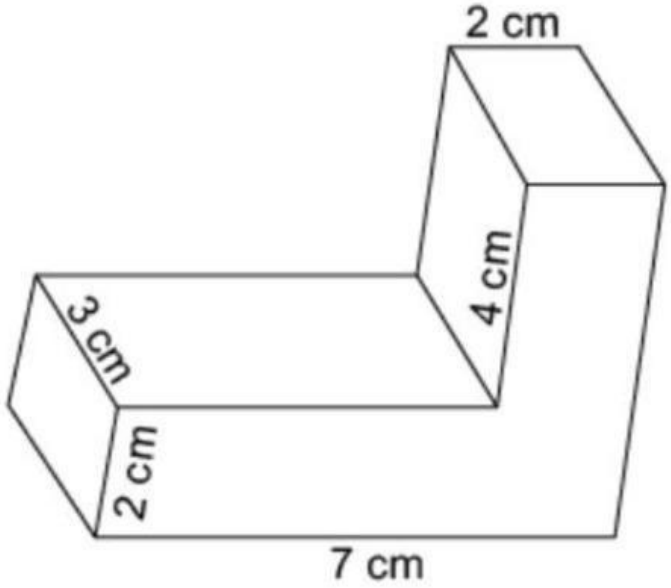

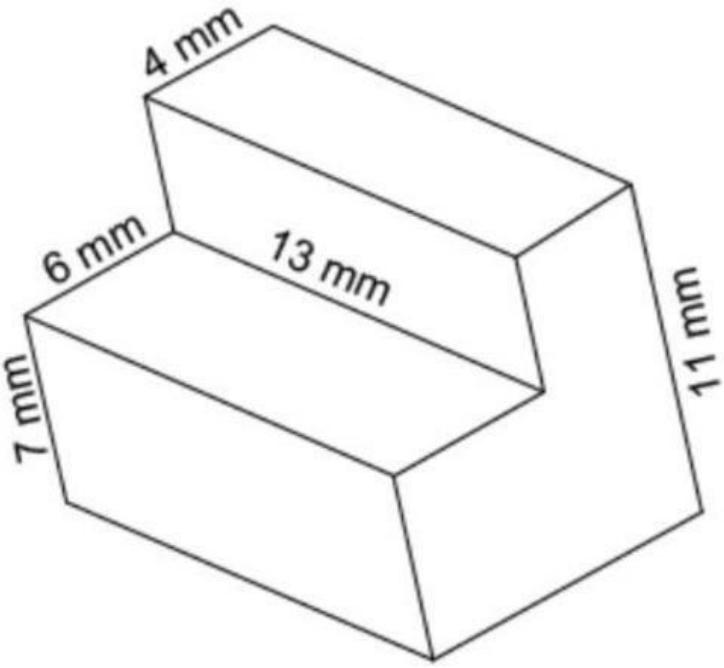

LIVEWORKSHEETS

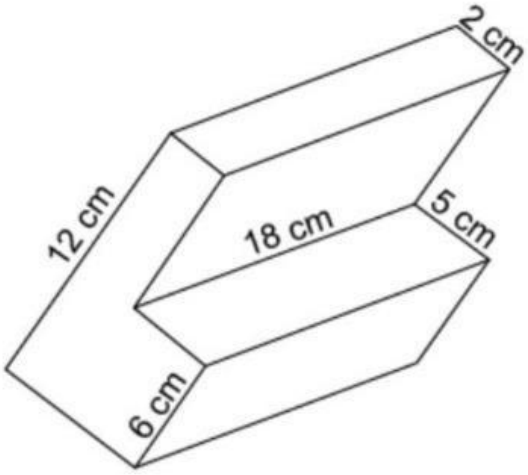

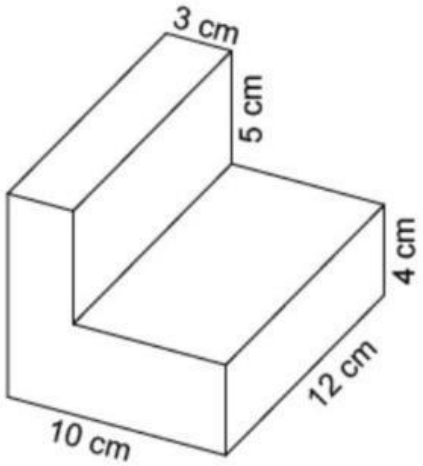

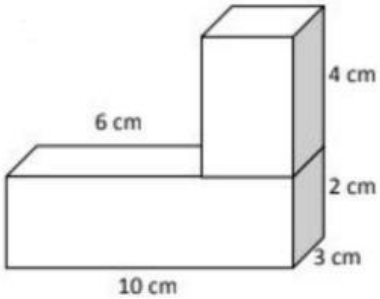

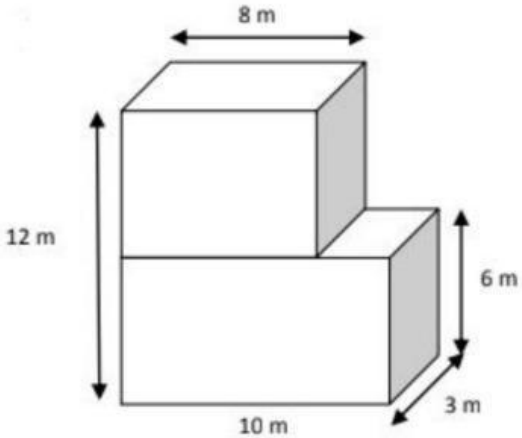

LIVEWORKSHEETS

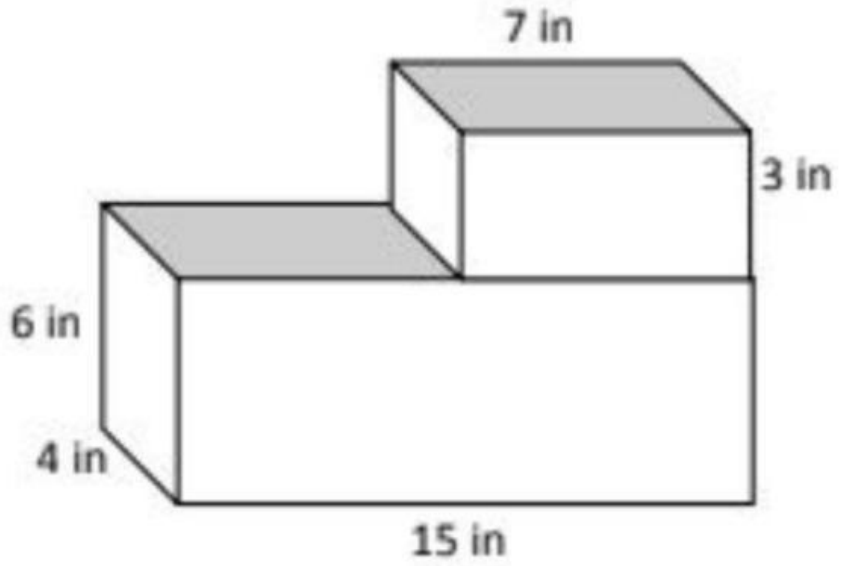

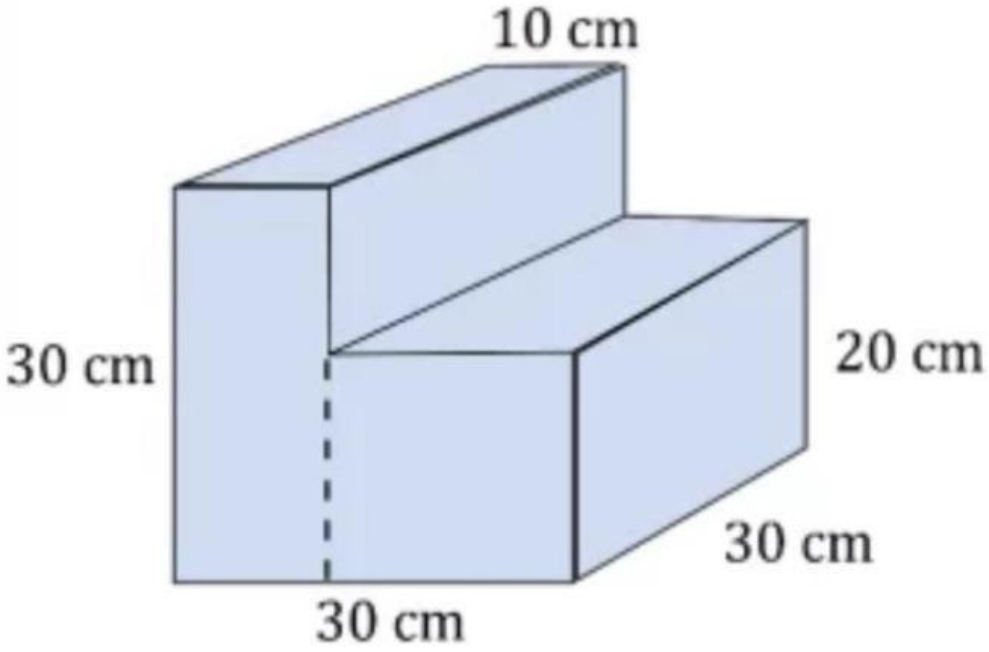

LIVEWORKSHEETS