Find the Measure of Angles - Parallel Lines

Find the measure of each angle indicated (?)

1)

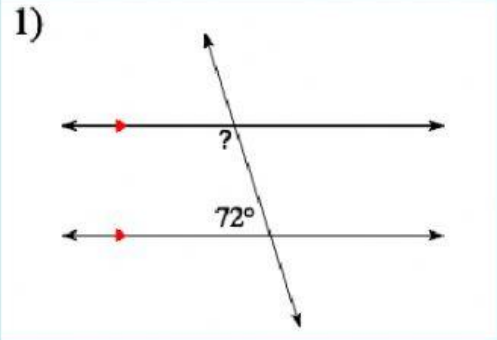

Angle Relationship: _____

Find ?:

2)

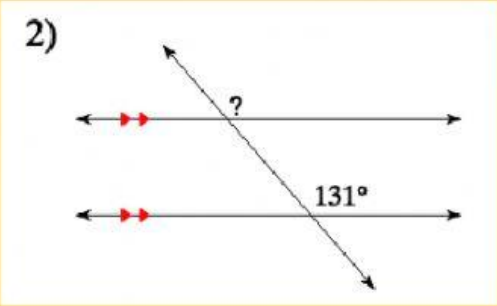

Angle Relationship: _____

Find ?:

3)

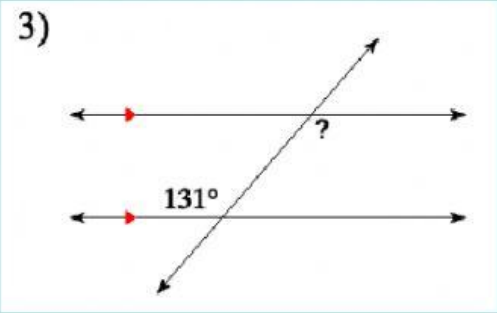

Angle Relationship: _____

Find ?:

4)

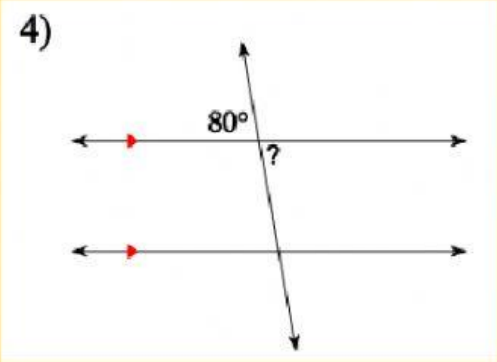

Angle Relationship: _____

Find ?:

Find the Measure of Angles - Parallel Lines

Find the measure of each angle indicated (?)

5)

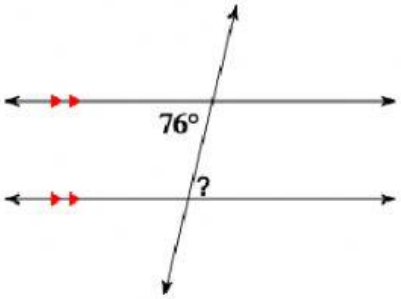

Angle Relationship: _____

Find ?:

6)

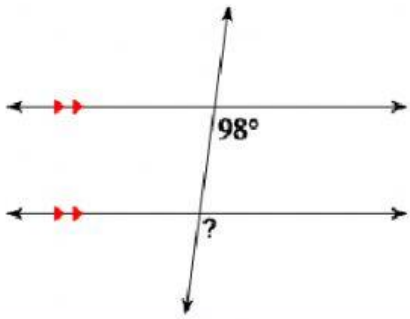

Angle Relationship: _____

Find ?:

7)

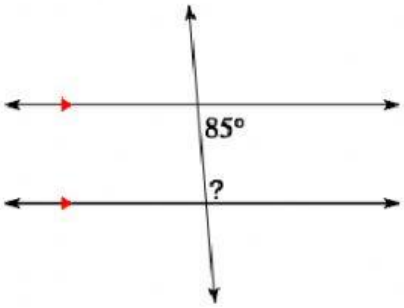

Angle Relationship: _____

Find ?:

8)

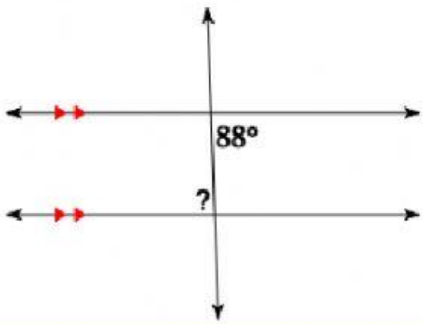

Angle Relationship: _____

Find ?: