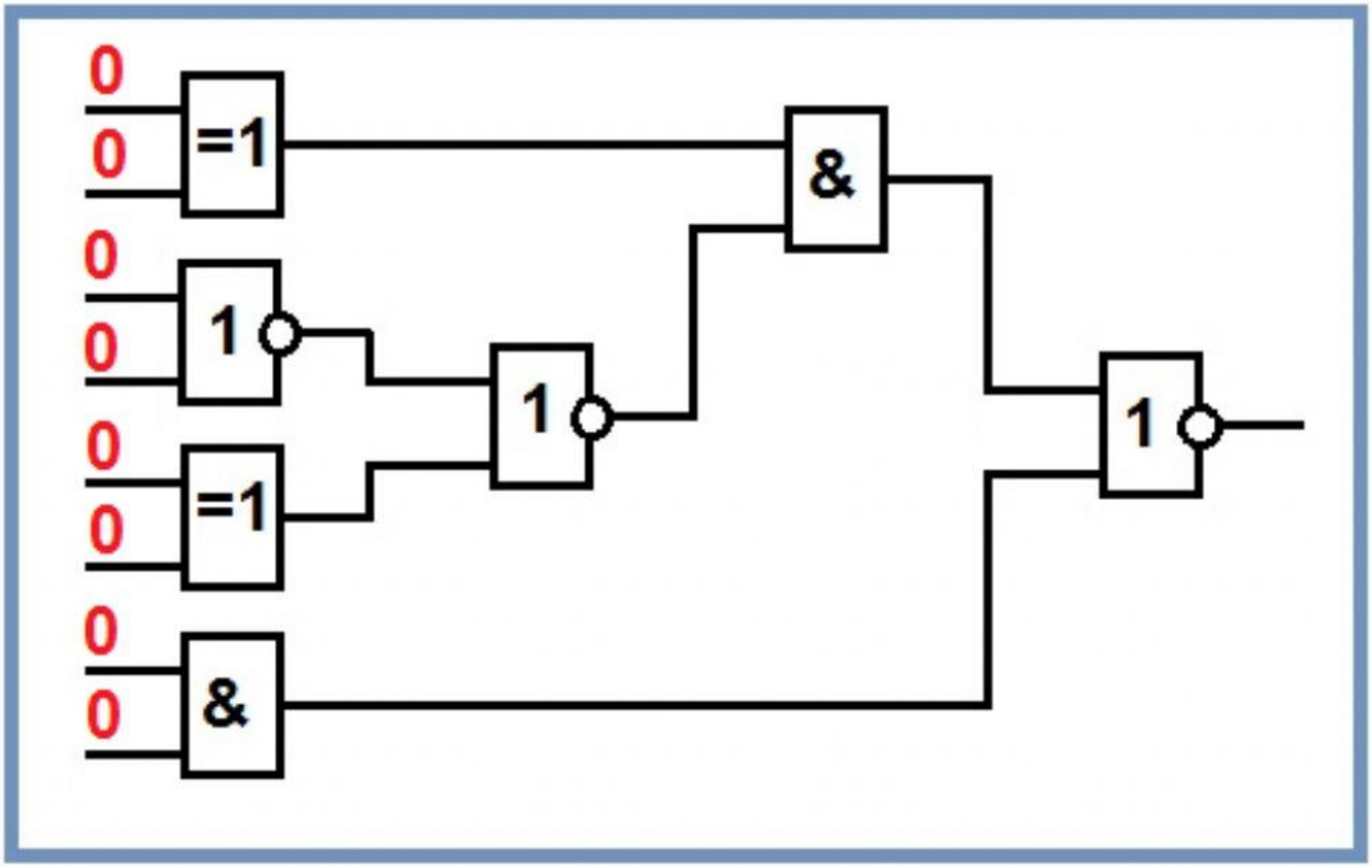
0
0
=1
0
0
1
0
0
=1
0
0
&
&
1
1