PREP II

REVISION FOR THE FINAL TEST

UNIT 1

1. Look and choose the correct option

1

jump / run

2

rollerblade / dance

3

climb / jump

4

ride a bike / dance

5

jump / rollerblade

6

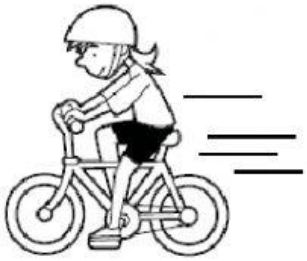

run / ride a bike

2. Look and write

ride a bike ~~dance~~ jump rollerblade run climb

1 I can dance.

2 I can't _____.

3 I can't _____.

4 I can _____.

5 I can _____.

6 I can't _____.

3. Put in the correct place.

~~cold~~ hot thirsty cold ~~hungry~~ hot
happy hot sad angry cold tired

1

I'm cold.
I'm hungry.

2

I'm _____.
I'm _____.

3

I'm _____.
I'm _____.

4

I'm _____.
I'm _____.

5

I'm _____.
I'm _____.

6

I'm _____.
I'm _____.

UNIT 2

1. Match

1

2

3

bus

~~lorry~~

train

motorbike

plane

taxi

4

5

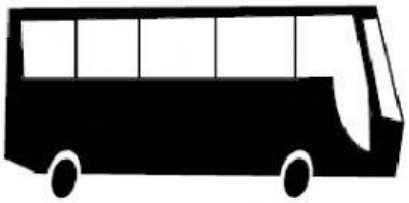

6

2. Write.

big fast ~~long~~ old new short slow small

1

long _____ _____

2

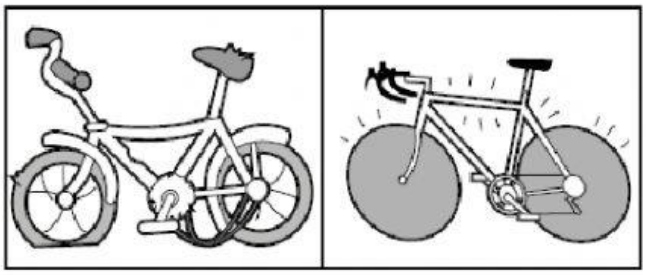

_____ _____

3

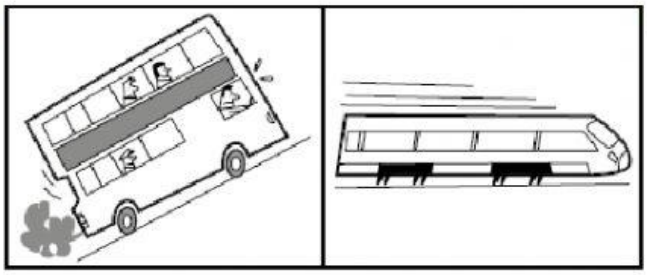

_____ _____

4

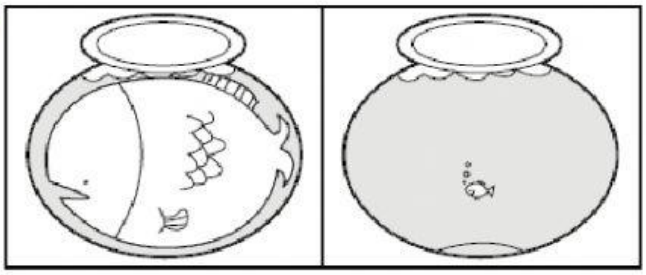

_____ _____

3. Look and write.

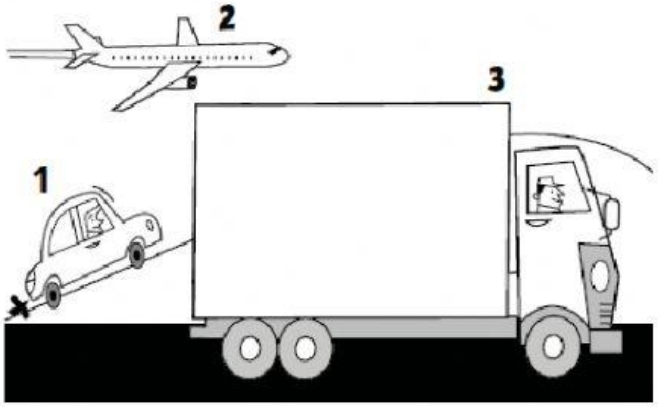

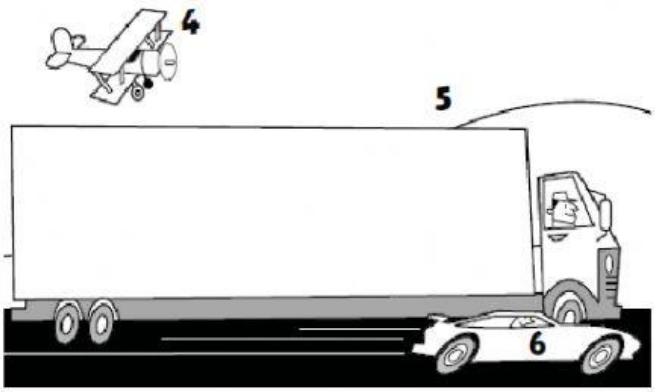

plane ~~slow~~ big

long fast old

1 It's a slow car.

2 It's a new _____.

3 It's a _____ lorry.

4 It's an _____ _____.

5 It's a _____ _____.

6 It's a _____ _____.

UNIT 3

1.Follow and write.

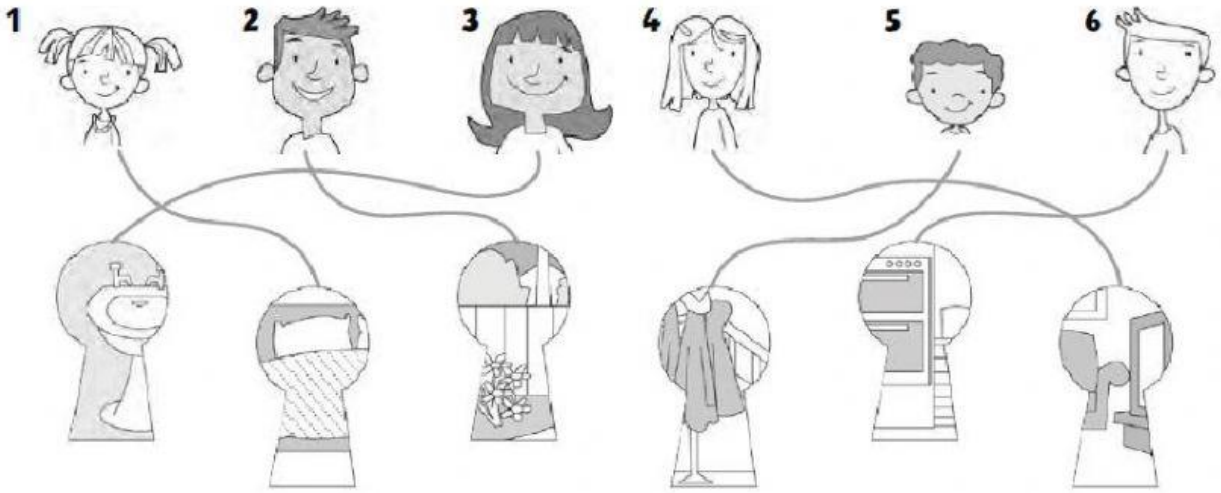

1 She's in the bedroom.

2 He's in the _____.

3 She's in the _____.

4 She's in the _____.

5 He's in the _____.

6 He's in the _____.

2. Look and write

~~bed~~ bird box cupboard flowers table tree scooter

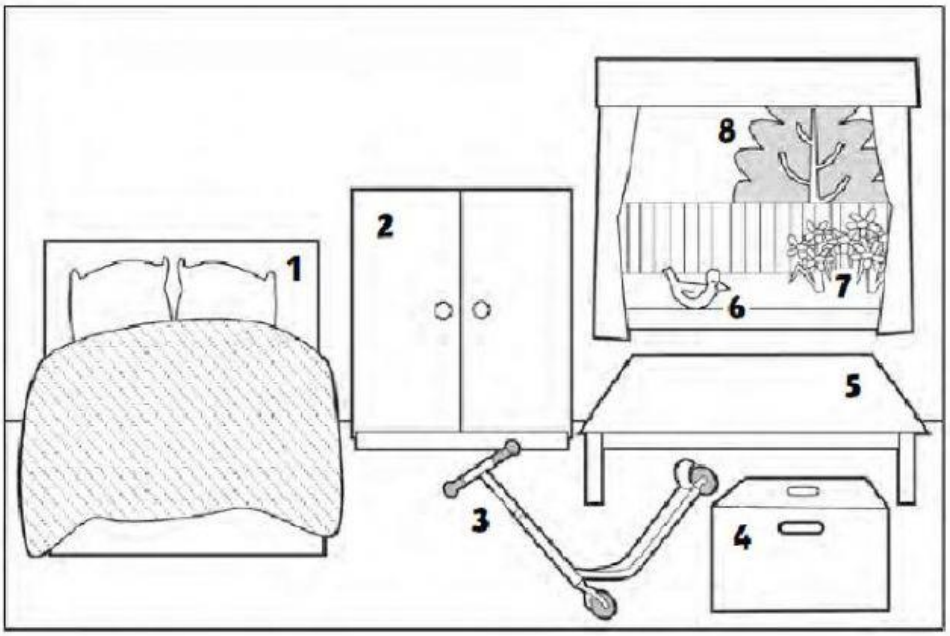

1 bed

2 _____

3 _____

4 _____

5 _____

6 _____

7 _____

8 _____

3. Look at the pictures. First, choose the correct option, then write.

1

2

3

4 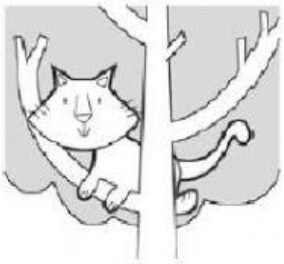

5 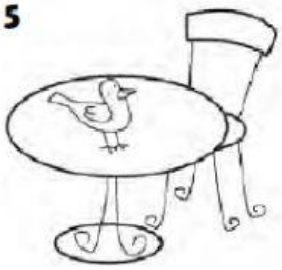

6

1 The car is in / on the box.

2 The dog is in / on the _____.

3 The girl is in / on the _____.

4 The cat is in / on the _____.

5 The _____ is in / on the _____.

6 The _____ is in / on the _____.

UNIT 4

1. Put the words in the correct blank.

snake fox bat mouse ~~frog~~ hedgehog

1 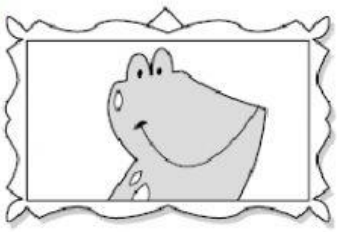

frog

2 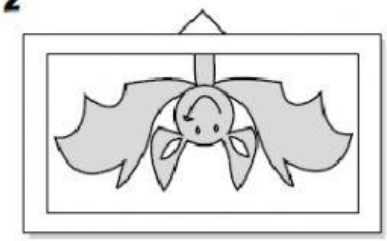

_____

3 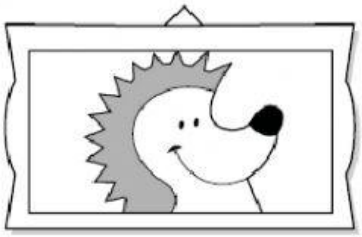

_____

4

_____

5 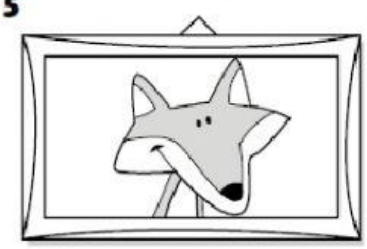

_____

6 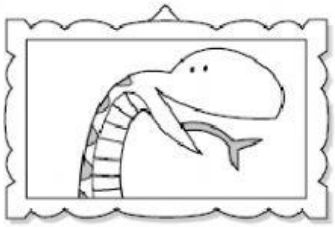

_____

2.Look and write. Read and select the correct option.

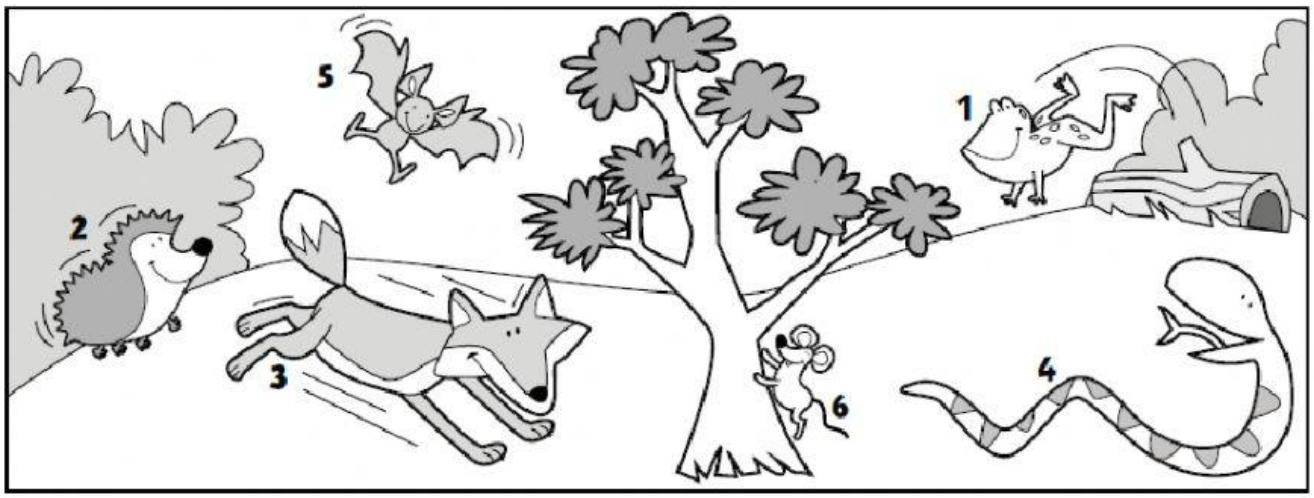

1 (frog) It can / can't jump.

2 (_____) It can / can't fly.

3 (_____) It can / can't run.

4 (_____) It can / can't jump.

5 (_____) It can / can't run.

6 (_____) It can / can't climb.