Newton laws worksheet 15

Calculating normal force

Eg 1 A 10 kg object is resting on a table

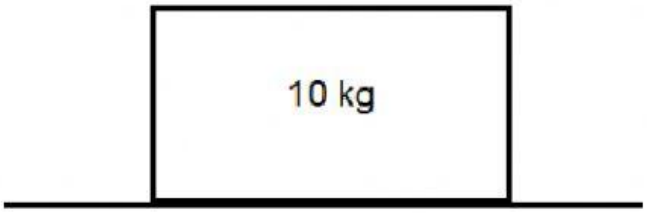

Step 1: always draw the free body diagram

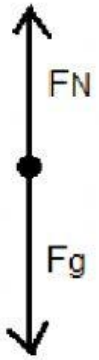

Since the object is not moving vertically, the vertical forces need to balance out (equal to each other).

$F_N = F_g$

$= m.g$

= ___ (____)

= _____ N **upwards**

Eg 2 A 10 kg object is resting on a table. A force of 30 N is applied on the box downwards.

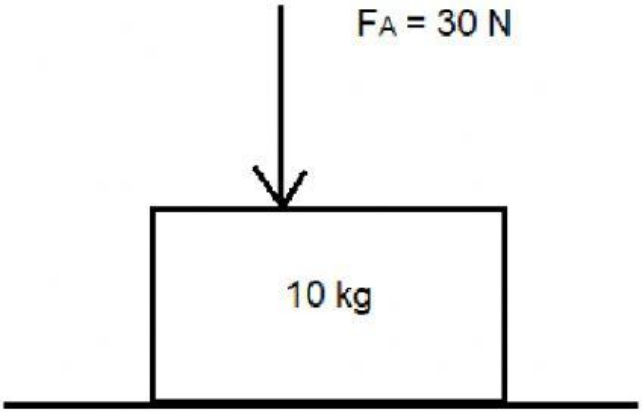

Step 1: draw the free body diagram

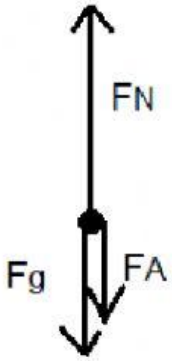

Since the object is not moving vertically, the vertical forces need to balance out (equal to each other).

$F_N = F_g + F_A$

$F_N = m.g + F_A$

F_N = ____(____) + _____

= _____N upwards

Eg 3

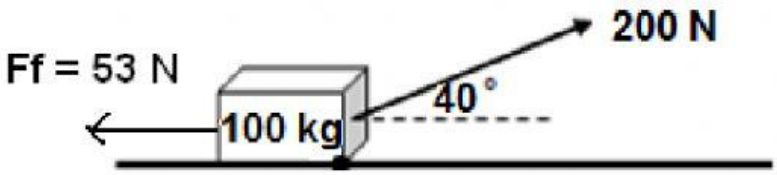

Always draw a free body diagram first

I'm going to draw just the vertical forces (since normal force is on the y-axis)

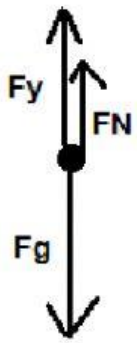

The vertical forces balance out, since the object doesn't move vertically.

Thus $F_y + F_N = F_g$

F._____Θ + F_N = m.g

200._____40 + F_N = _____(_____)

F_N = _____N **upwards**

Eg 4

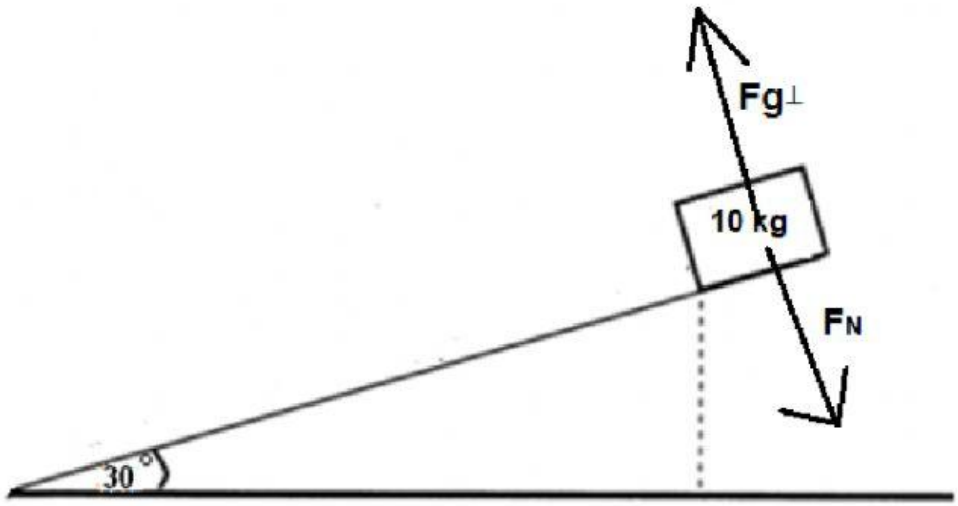

When an object is on a slope, the normal force is equal to the Fg⊥.

$F_N = F_{g\perp}$

F_N = Fg._____Θ

F_N = m.g._____Θ

= 10(9,8)._____

= _____N **upwards**

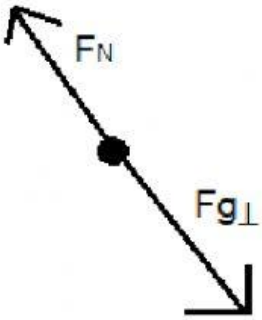

Eg 5

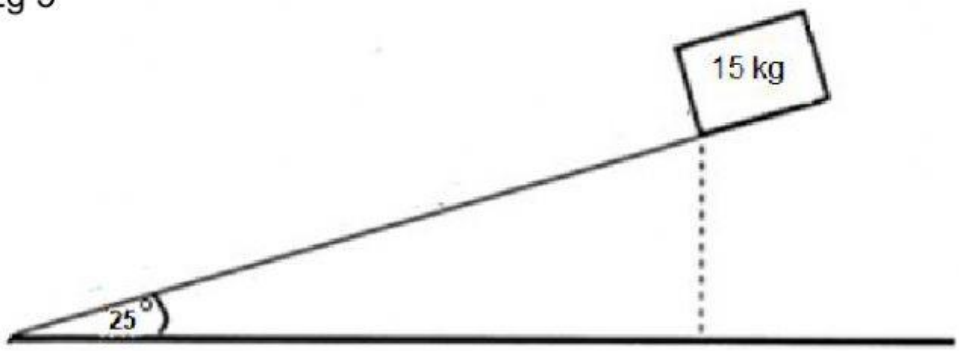

$F_N = Fg\perp$

$F_N = Fg._____\ \Theta$

$F_N = m.g._____\ \Theta$

$= 15(9,8)._____$

$= _____ N\ _____$

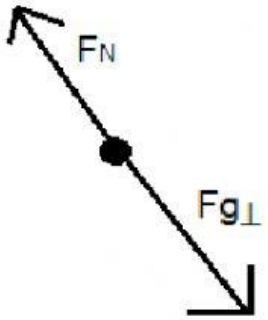

Eg 6

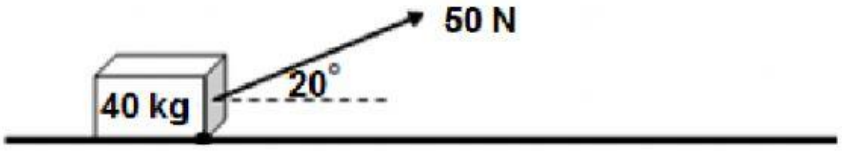

The vertical forces balance out, since the object doesn't move vertically.

Thus $F_y + F_N = Fg$

$F.\sin\Theta + F_N = m.g$

$50.\sin 20 + F_N = 40(9,8)$

$F_N = 374,90N$

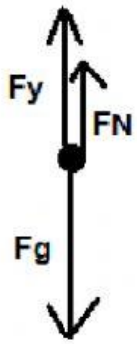

Eg 7. A 7kg object is pulled to the right with a force of 100 N and at an angle of 30° to the horizontal and to the left with a force of 50 N.

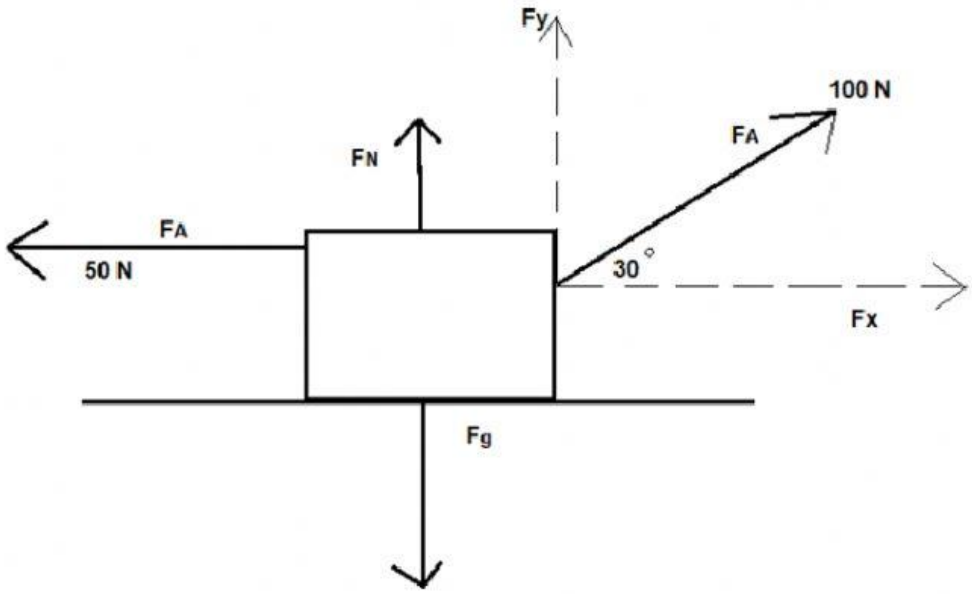

The vertical forces:

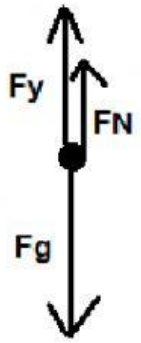

$F_y = F.\sin \Theta$

$= 100.\ \text{Sin } 30$

$= 50$ N upwards

$F_g = mg$

$= 7\ (9.8)$

$= 68{,}6$ N

Since the Fg force is 68,6 N upwards and the F_y force is 50 N upwards, the F_N needs to be

$F_N + F_y = F_g$

$F_N = F_g - F_y$

$F_N = 68{,}6 - 50$

$= 18{,}6$ N

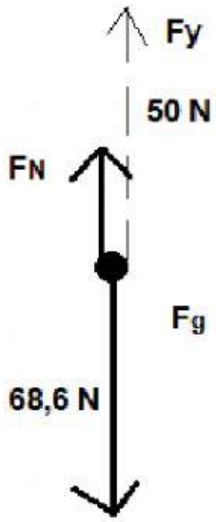

The vertical forces balance out

Eg 8. A 5kg box is pushed down with a force of 200 N at an angle of 40° to the horizontal.

There is a frictional force of 20 N on the box to the left.

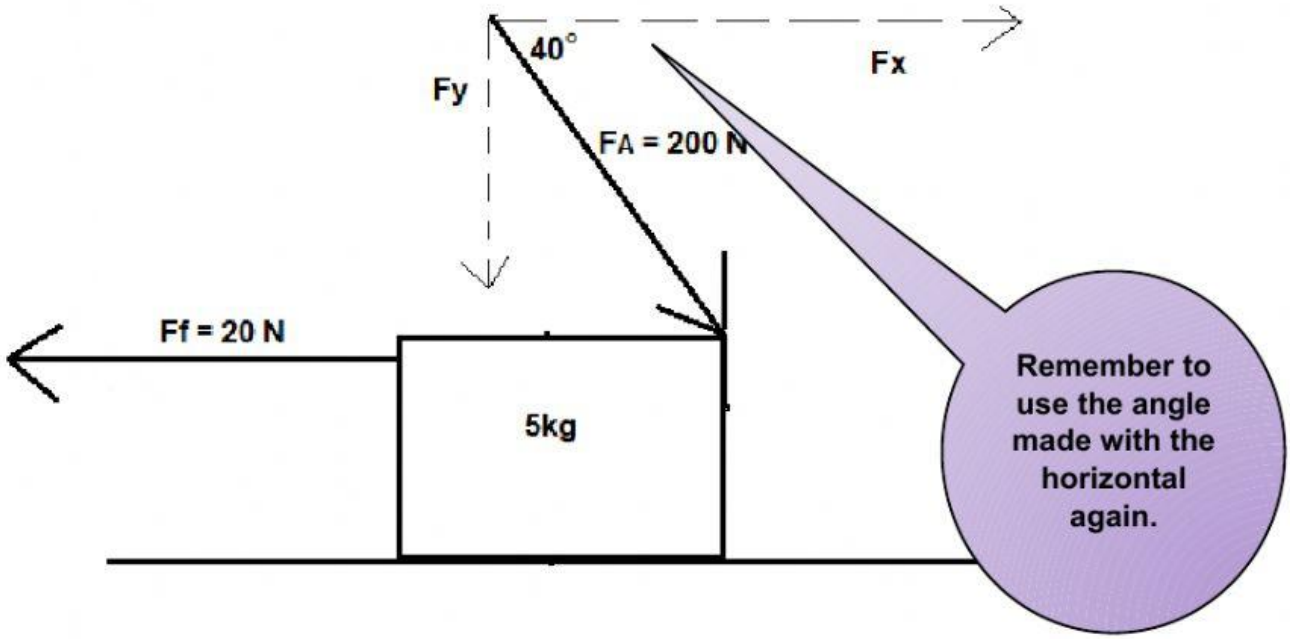

Vertical forces:

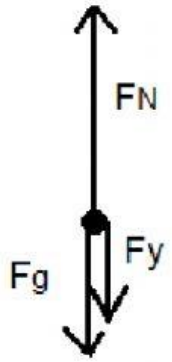

The vertical forces balance out, thus

$F_N = Fy + Fg$

F_N = F.____⊖ + m.g

F_N = 200 _____ + ____._____

F_N = _____ N

Exercise 15:

Calculate the normal force on the following objects

Do this exercise in your physics book

15.1 A 15 kg box is resting on a table

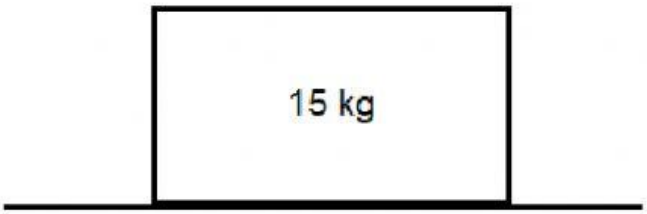

15.2 A 15 kg box is resting on a table and a force of 20 N is applied to the box downwards.

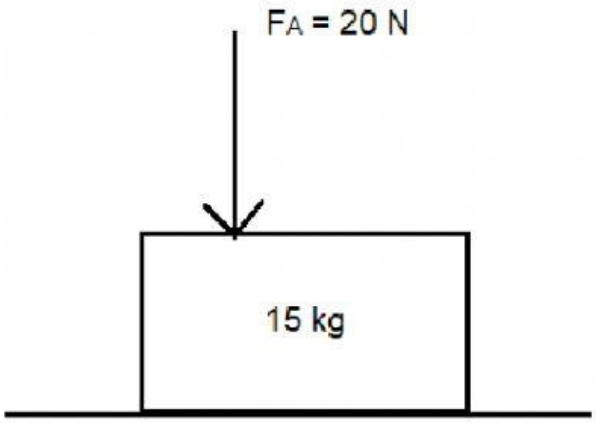

15.3 A 15 kg box is pulled to the right with a force of 40 N

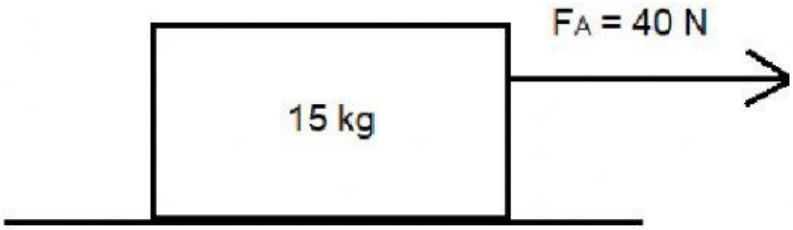

15.4 A 12 kg object is pulled up with a force of 100N, at an angle of 30° to the horizontal.

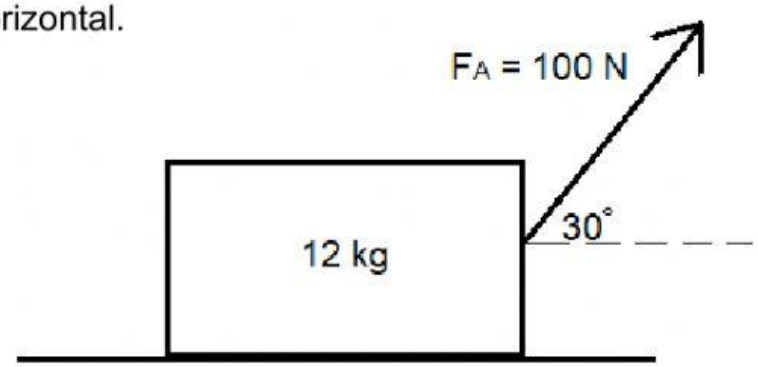

15.5 A 9 kg object is pulled up with a force of 80N, at an angle of 40° to the **vertical**.

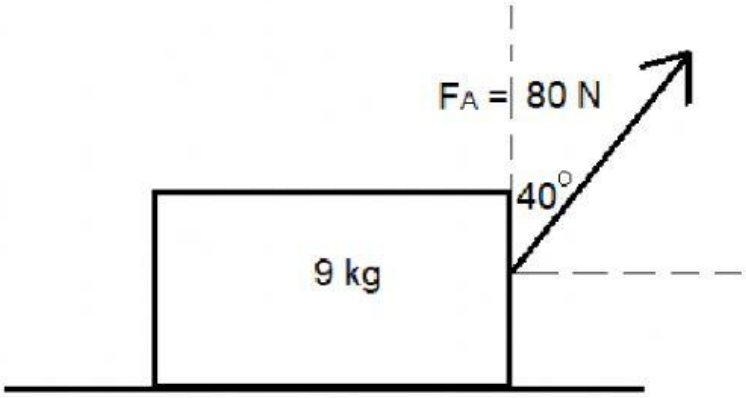

15.6 A 12 kg object is pushed down with a force of 100N, at an angle of 30° to the horizontal.

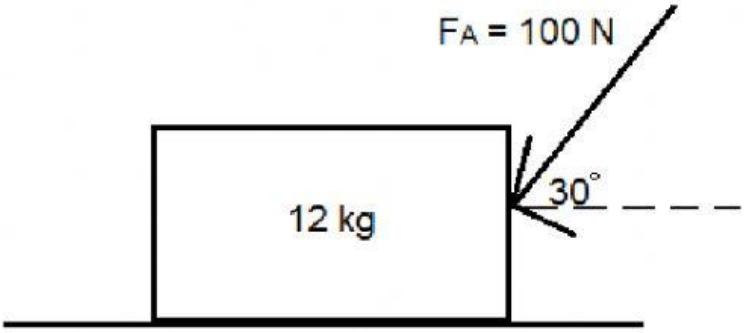

15.7 A 8 kg box is placed on a slope.

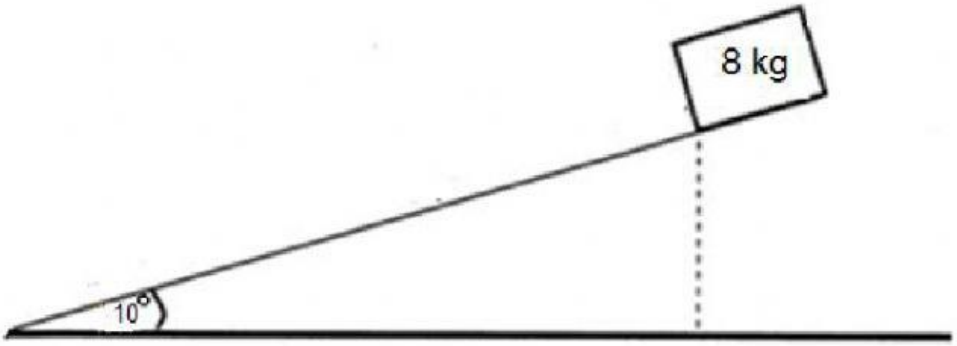

15.8 A 16 kg box is placed on a slope.

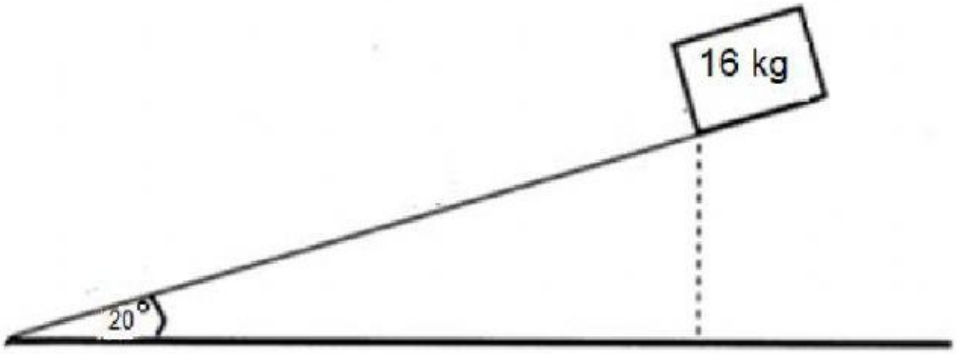

15.9 Tricky one
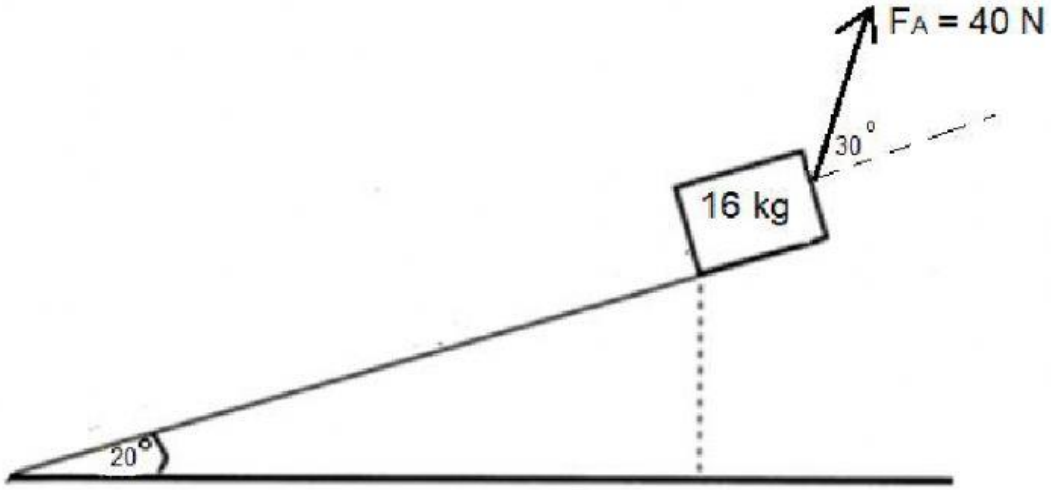
A 16 kg box is pulled at an angle of 30° to the horizontal with a force of 40N.