Recognizing the Metric System Used in Science:
Listen and Speak pt. 1

Directions: Click the speakers to hear the word. Click the microphone to say the word.

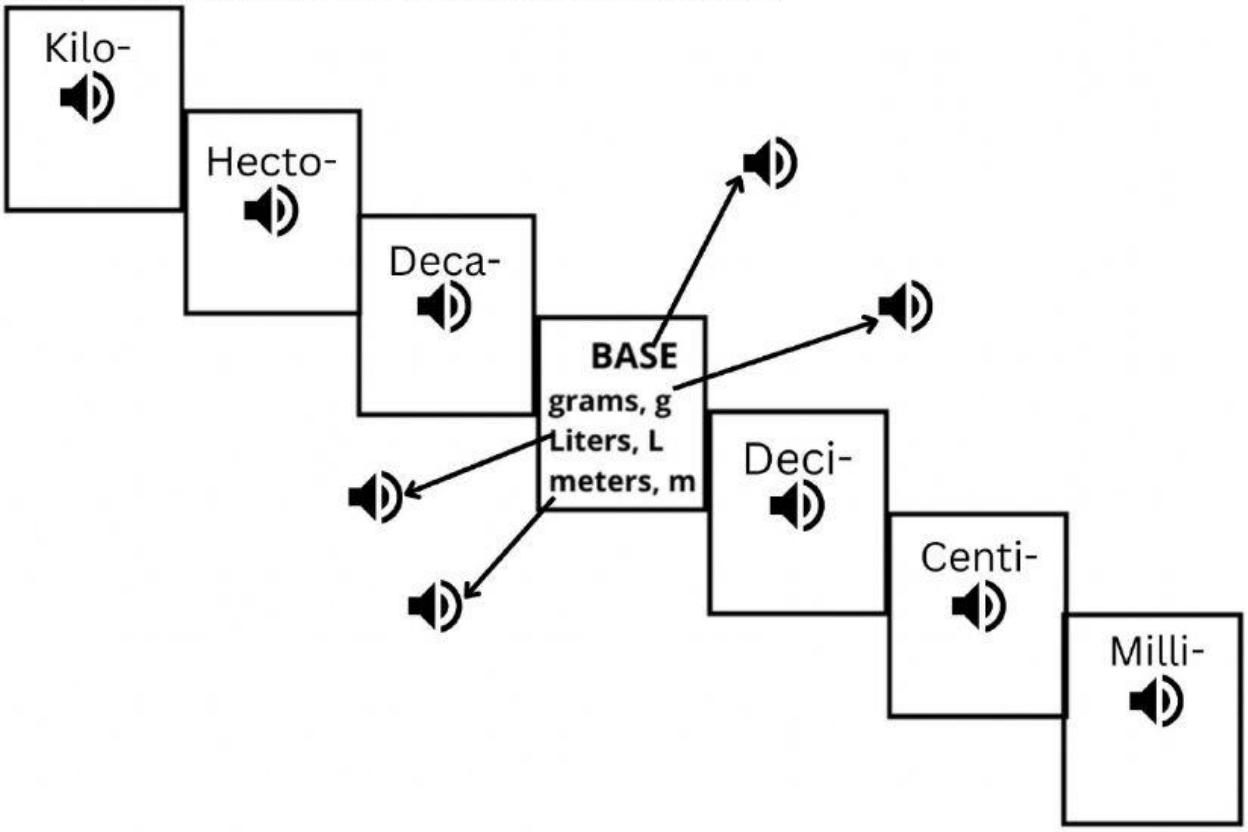

LIVEWORKSHEETS