Match the colours and shapes with the correct definitions.

Colors

A. Red
B. Yellow
C. Green
D. Blue

1. Mandatory Actions
2. Positive Action
3. Caution
4. Prohibition

Shapes

E. ○
F. △
G. □ and ▭

5. Emergency and Information
6. Prohibitions and Instructions
7. Warnings

Match the sign with the description.

Positive Action	Caution	Mandatory Actions	Prohibition

A.

B.

C.

D.

LIVEWORKSHEETS

1)

2)

3)

4)

5)

6)

7)

8)

9)

10)

11)

12)

13)

14)

15)

16)

17)

18)

19)

20)

LIVEWORKSHEETS

Study the vocabulary. Then use the words in the box to complete the safety instructions. Use some of the words more than once.

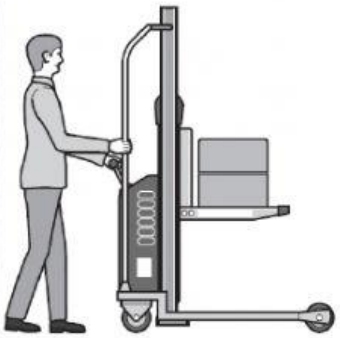
lift truck

scissor table

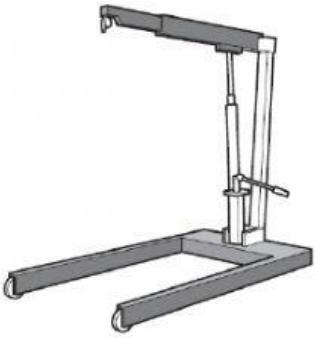
engine hoist

cylinder trolley

always / don't / must / mustn't / never

1 Don't _____ smoke in the garage.

2 _____ wear safety goggles when you use the sander.

3 _____ lift heavy weights alone by hand. Use a lift truck in the workshop.

4 _____ wear trainers when you are working in the workshop. _____ wear safety boots.

5 You _____ use a cylinder trolley when you move full or empty gas cylinders.

6 _____ leave fuel containers in the workshop. _____ put them in a locked storeroom.

7 You _____ use a welder without safety gloves and eye protection.

8 _____ work on a fuel tank which has fuel in it.

9 You _____ lower a gearbox from inside a car without a scissor table.

10 _____ use an engine hoist when you remove an engine.

LIVEWORKSHEETS

Complete each sentence with a pair of verbs.

lift–injure / reverse–hit / use–start / carry–drop / allow–injure /
service–trap / run–slip / leave–roll / walk–fall / climb–fall

1 Don't run inside the workshop; you might slip on an oily patch on the floor.

2 Don't _____ petrol to burn rubbish or waste; you could _____ a big fire.

3 Don't _____ a car unbraked and in gear; it could _____ backwards and injure somebody.

4 Don't _____ a customer into the workshop; they might _____ themselves.

5 Don't _____ inside the workshop; you might _____ somebody or something.

6 Don't _____ a ladder which is unsecured; you could _____ and hurt yourself.

7 Don't _____ a car engine in poor light; you might _____ your hand.

8 Don't _____ objects from raised storage areas down a ladder; you could _____ them.

9 Don't _____ heavy objects without a hoist; you might _____ your back.

10 Don't _____ under the raised forks of a fork-lift truck; an object could _____ off and hit you.

LIVEWORKSHEETS