Codeyoung

Concept CW_Grade-6_Mensuration

Volume of Cubes and Cuboids

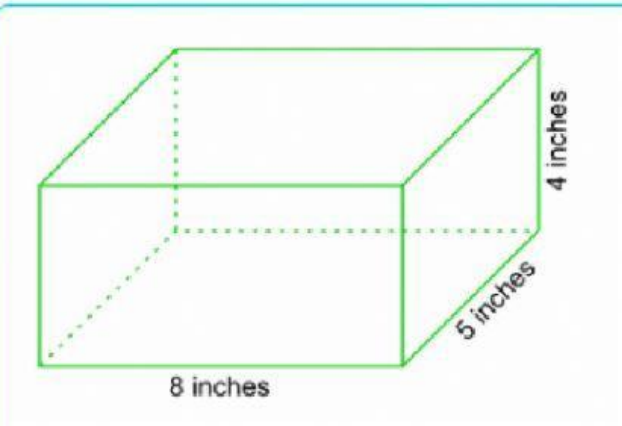

What is the volume of the cuboid (rectangular prism)?

A $160\ in^3$

B $180\ in^3$

C $184\ in^3$

D $192\ in^3$

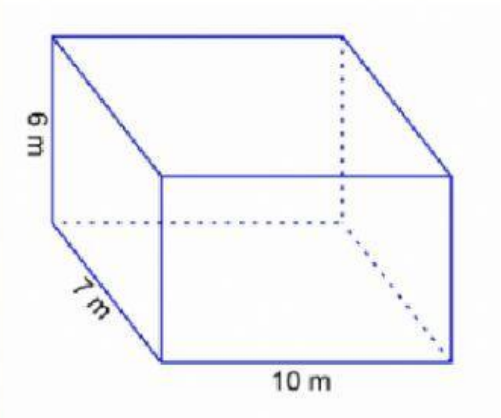

What is the volume of the cuboid (rectangular prism)?

A $344\ m^3$

B $360\ m^3$

C $378\ m^3$

D $420\ m^3$

LIVEWORKSHEETS

Codeyoung

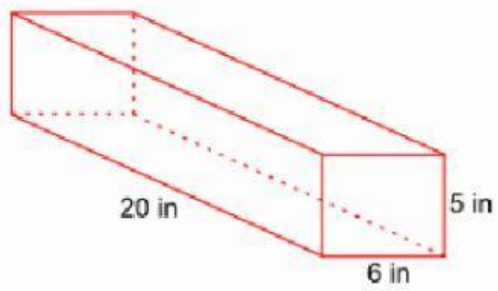

What is the volume of the cuboid?

A $300\ in^3$

B $500\ in^3$

C $600\ in^3$

D $1{,}000\ in^3$

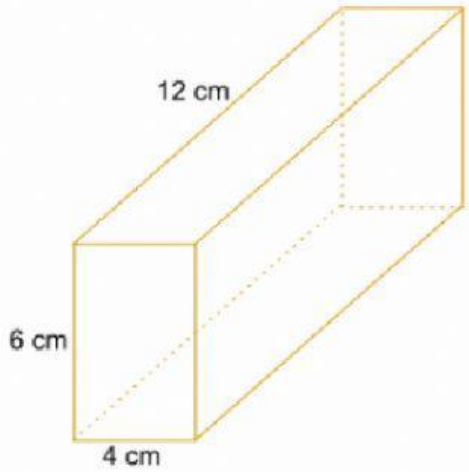

What is the volume of the cuboid?

A $144\ cm^3$

B $288\ cm^3$

C $312\ cm^3$

D $432\ cm^3$

LIVEWORKSHEETS

Codeyoung

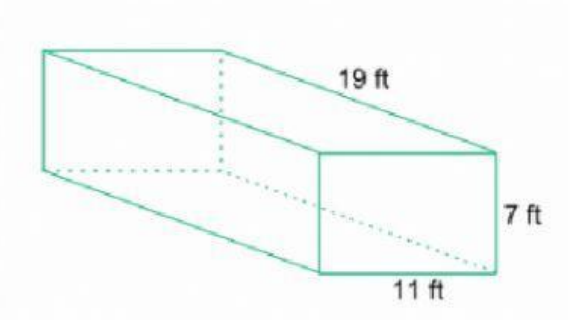

What is the volume of the cuboid?

A 838 ft^3

B 1,330 ft^3

C 1,386 ft^3

D 1,463 ft^3

The dimensions of an Olympic-sized swimming pool are 50 m long, 25 m wide, and the water is 2 m deep. What is the volume of water?

A 2,500 m^3

B 2,600 m^3

C 2,700 m^3

D 5,000 m^3

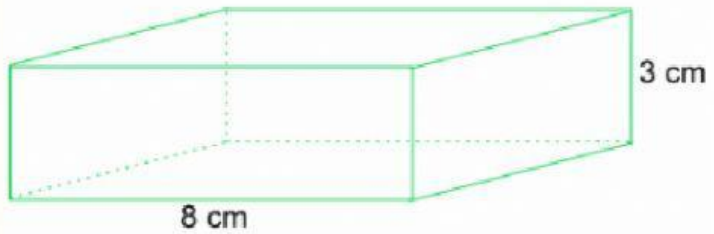

The volume of the cuboid is 120 cm^3.
What is its width?

A 3 cm

B 4 cm

C 5 cm

D 6 cm

LIVEWORKSHEETS