Simple Electric Circuit

A flow of electric charges is called an **electric current**. A wire, a bulb and a battery are needed to make a path in which negative charges could flow. This path is called a **circuit.**
The **battery** is the power source. It supplies the energy to move charges through the circuit.

The electric wire is made of metal, mainly **copper**. This wire is the **conductor** that allows current to conductor pass through it easily. The plastic covering the wire is called an insulator. **Insulators** do not allow insulator current to pass through them easily.

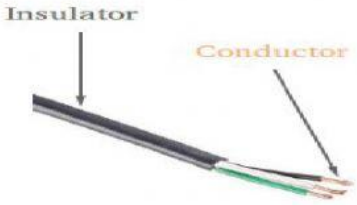

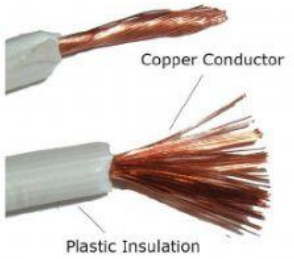

The **switch** is the control device. It is used to turn an electric current on or off. When the switch is on, the path is complete. Then the light bulb comes on (closed circuit). When the switch is off, the path is broken (open circuit). The light bulb would be off. The bulb is called the load device. This is what needs electrical energy to work.

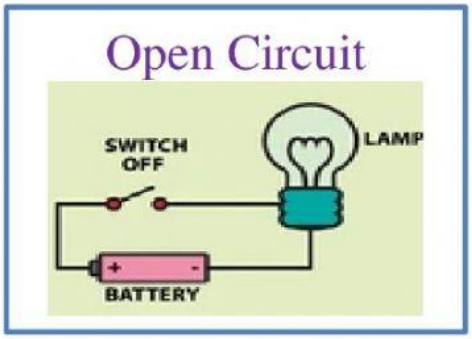

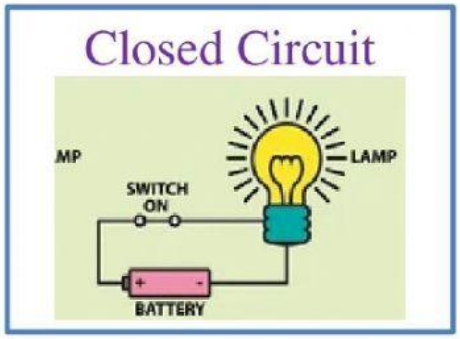

Review Questions. Answer the following questions in your notebook.

1. Name three things that are needed to build an electric circuit. [3]
2. What is a circuit? [1]
3. What is used to supply energy in a circuit? [1]
4. What is the difference between a conductor and an insulator? [2]
5. Give an example of each:

Conductor: _____ Insulator: _____

6. When is a path complete? [1]
7. What happens to the bulb when the switch is off? [1]

8. **Draw and label the diagram of a simple circuit.**

battery bulb conductor

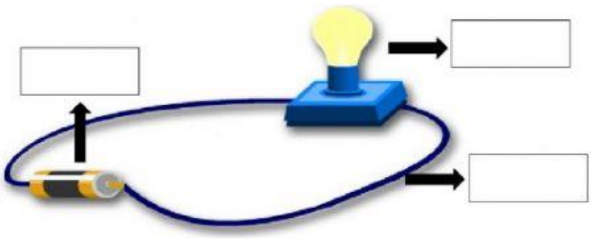

LIVEWORKSHEETS