PC5.3 Non-Inverting Amplifier

For the non-inverting amplifier shown below, answer questions a to d.

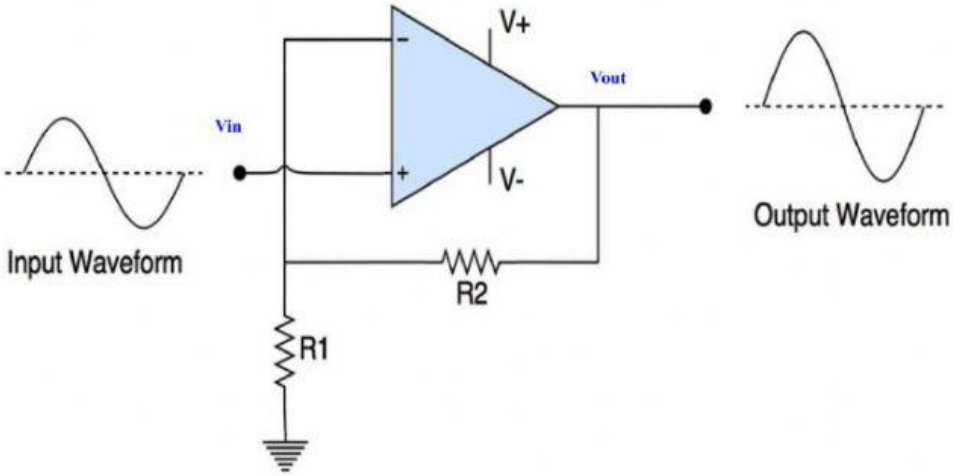

a) What is the output expression?
   a. $V_{out}=V_{in}$
   b. $V_{out} =V_{in}(R_2/R_1)$
   c. $V_{out} = V_{in}(1+R_2/R_1)$
   d. $V_{out} = V_{in}(1+R_1/R_2)$

b) If R1=1KΩ, R2=10KΩ, Vin= 2V. Calculate the voltage Gain A?

c) If R1=1KΩ, R2=10KΩ, Vin= 2V. Calculate Vout?

d) Is the output of this amplifier inverted?

LIVEWORKSHEETS