Colegio Petit Jean Paul
1° A
Unit 1. My classroom

Name:_____

CD 15 Listen and number.

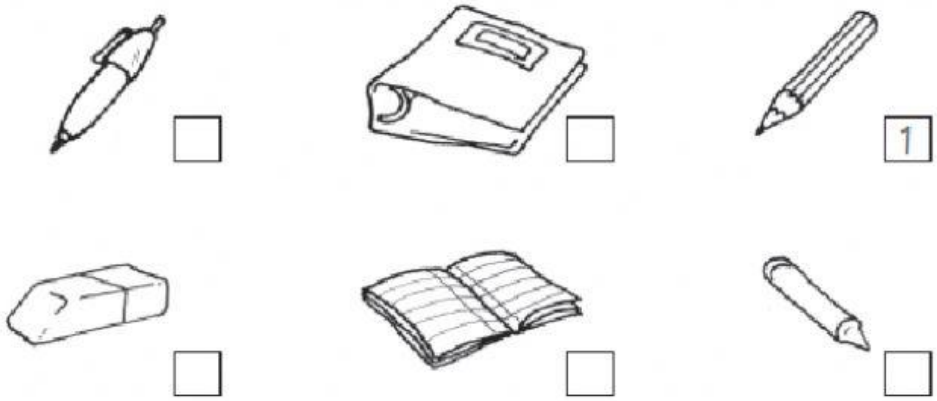

/10

CD 16 Listen and match.

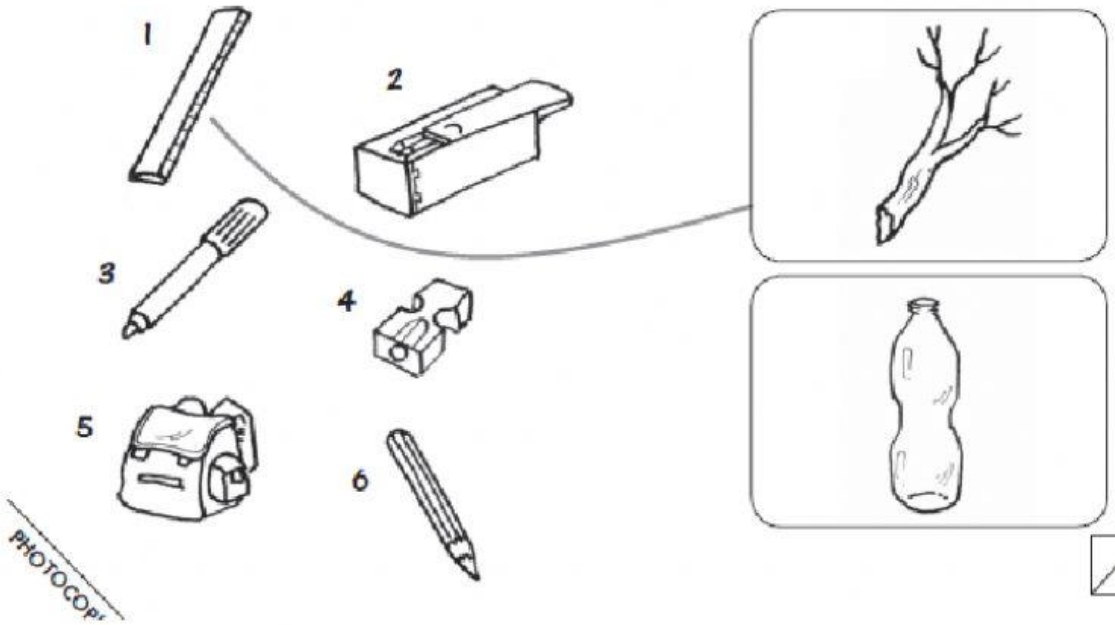

/10

PHOTOCOPI

LIVEWORKSHEETS

Look, read and circle.

1 The ruler is plastic / wood.

2 The pen is plastic / wood.

3 The school bag is plastic / wood.

4 The pencil is plastic / wood.

5 The pencil sharpener is plastic / wood.

6 The pencil case is plastic / wood.

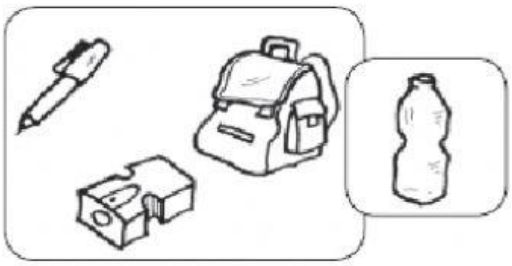

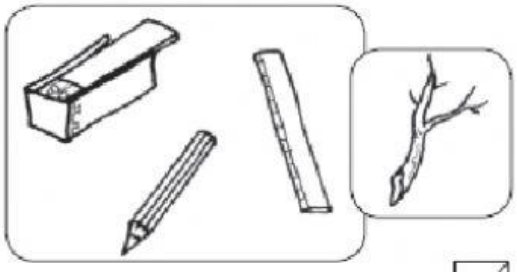

PHOTOCOPIABLE

/10

Speaking

PHOTOCOPIABLE

/10

LIVEWORKSHEETS