NAME _____ PERIOD _____ DATE _____

PATTERN SYMBOLS QUIZ

Find each number on the picture below. Identify the word that that is the correct name for that letter. Write the correct letter in the blank provided.

BEGINNER

1. _____
2. _____
3. _____
4. _____
5. _____
6. _____

ADVANCED

7. _____
8. _____
9. _____
10. _____
11. _____
12. _____

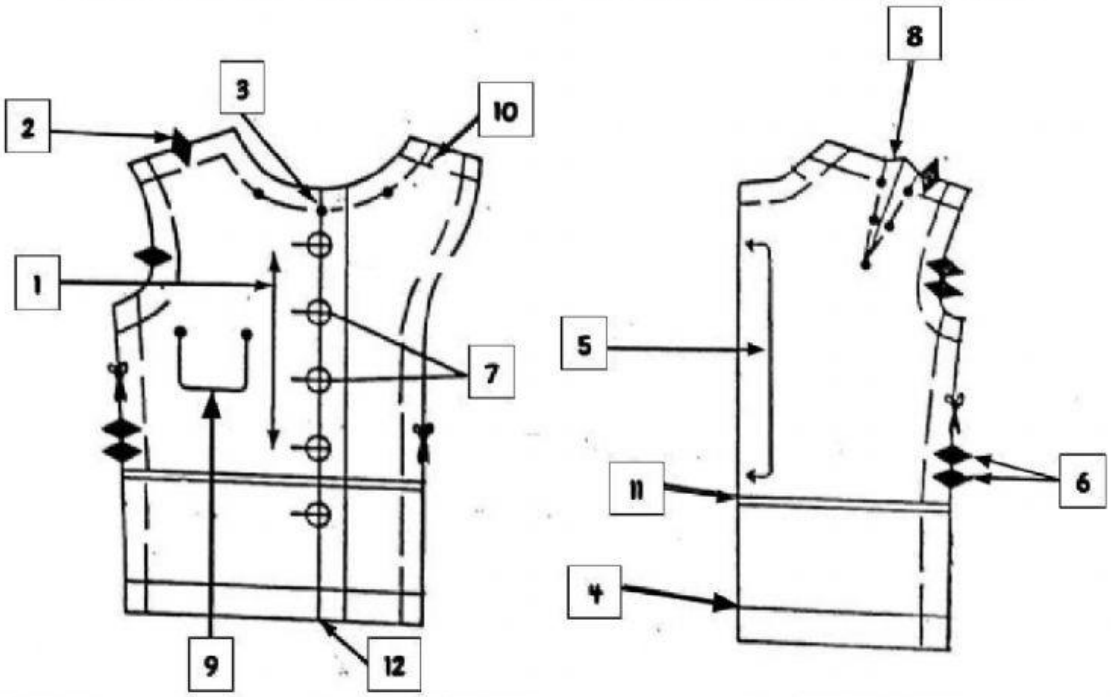

A. PLACE ON FOLD
B. GRAINLINE
C. NOTCH
D. FOLDLINE
E. STITCHING LINE
F. DART
G. DOUBLE NOTCH
H. BUTTONS
I. CENTER FRONT
J. POCKET MARKING
K. DOTS
L. ADJUSTMENT LINE

LIVEWORKSHEETS