LISTEN TRUE OR FALSE ?

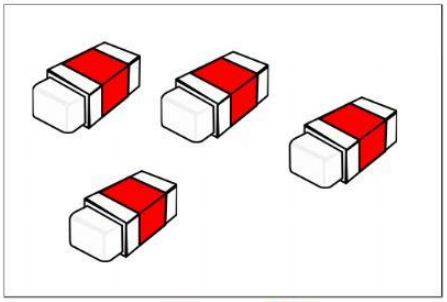

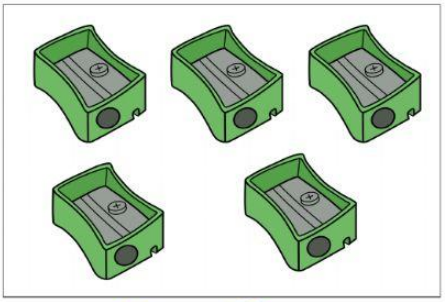

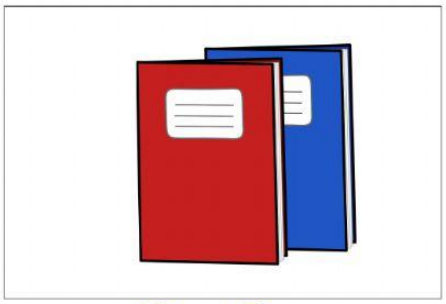

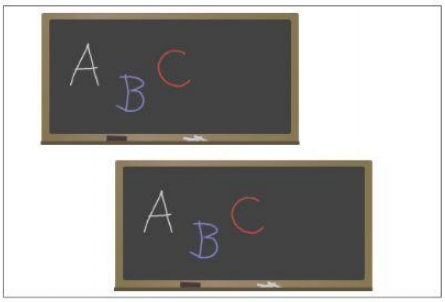

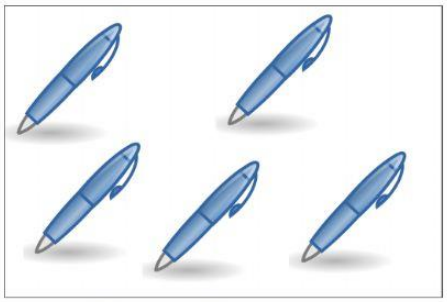

LIVEWORKSHEETS