Name : Class:

Acid- Base Titration

TITLE : DETERMINATION OF THE CONCENTRATION OF ACID SOLUTION

ROSSA had ran a titration between 25.00 ml of hydrochloric acid of unknown concentration and 0.10M sodium hydroxide. 2 drops of phenolphthalein was added to indicate the end point.

Before starting the first titration, burette is set to 1.00. Then, **ROSSA** start the titration. Once the colour solution inside the conical flask change from colourless to pale pink that persist for more than 30s, she immediately stop titrate and record the reading as 23.30. After that, she repeated the titration 3 times and obtained data as below. **ROSSA** need to calculate the concentration of HCl.

Answer all question in partition below based the experiment carried out by ROSSA.

A. Label the apparatus. (drag and drop)

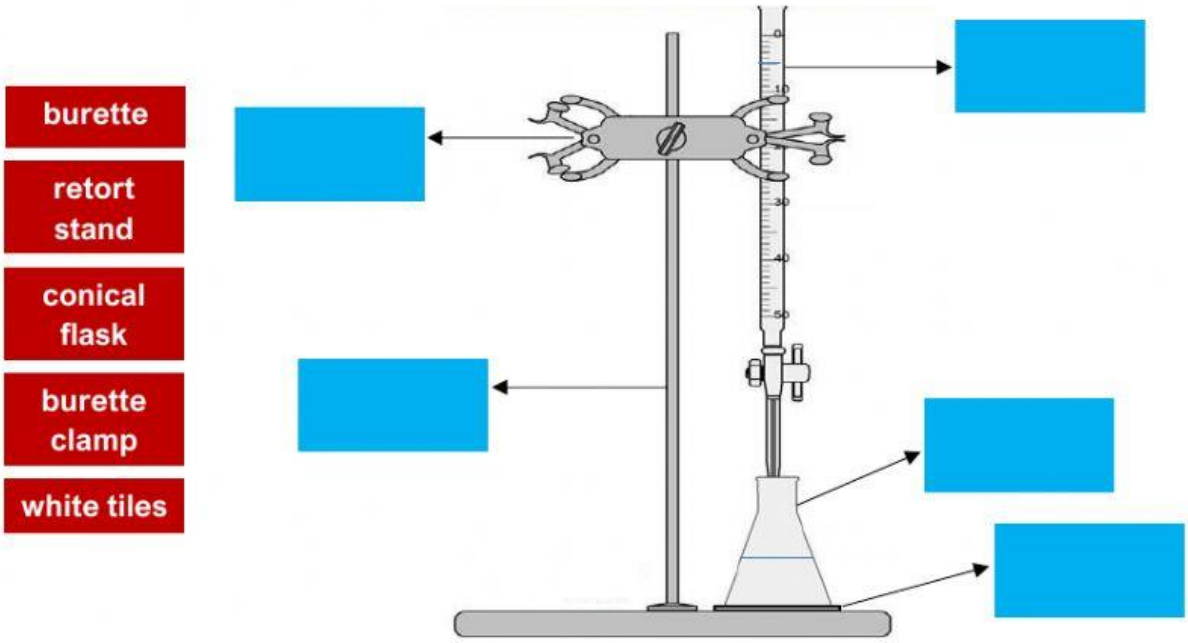

B. Complete the table below. -Write down

Burette reading	Gross	I	II	III
Final reading		47.20	23.40	46.00
Initial reading		25.10	1.20	24.00
Volume NaOH used (ml)				

LIVEWORKSHEETS

C. Label the diagram below. (Let the data used is for gross reading) – drag and drop

NaOH solution	Phenolphthalein	1.00	Final reading
HCl solution	End point	23.30	Initial reading

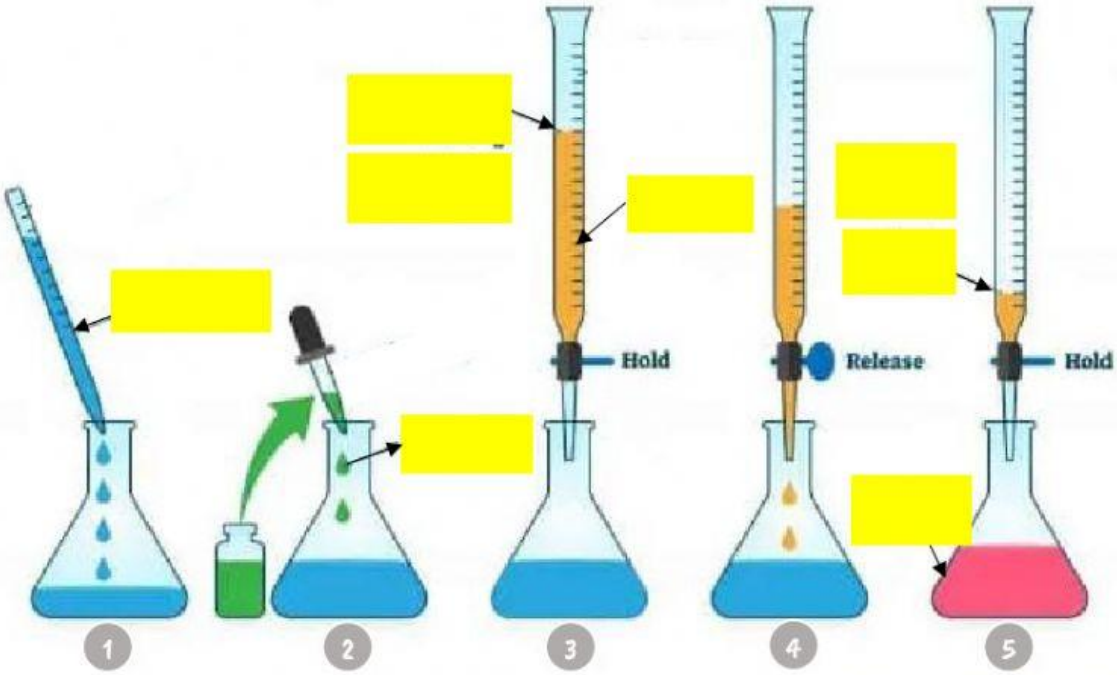

Neutralized solution
Indicator has changed colour

D. Classify the following term into 2 groups. – drag and drop

NaOH solution	HCl solution

titrant	in burette	analyte	fixed volume
standard solution	known concentration	in conical flask	unknown concentration

LIVEWORKSHEETS

E. Match the correct pair.

Titration	**solution with known concentration**
Indicator	**laboratory technique used to determine the concentration of an unknown solution**
End point	**the point when indicator change colour during titration**
Equivalence point	**chemical reaction where an acid reacts with a base to form a neutral solution of a salt and water**
Standard solution	**the point at which reaction is completed: equivalent mole of acid and base reacted.**
Neutralization	**substances whose change color due to change in pH**
Gross reading	**to estimate actual volume of titrant use for neutralization**

F. Calculation. – fill in the blank

1. Calculate the average volume of NaOH used.

Average volume NaOH used = volume NaOH used (I + II + III)

= ____ mL

2. Balance chemical reaction below.

$$__\ NaOH + __\ HCl \rightarrow __\ NaCl + __\ H_2O$$

3. Calculate the molarity of HCL

$$\frac{M_{NaOH}\ V_{NaOH}}{M_{HCl}\ V_{HCl}} = \frac{n_{NaOH}}{n_{HCl}}$$

$$\frac{____ \times ____}{M_{HCl} \times ____} = \frac{__}{__}$$

M_{HCl} = ____ mol/L @ M

LIVEWORKSHEETS

G. Answer the question below. – write down

CHEMISTRY

1. State the objective of this experiment.

   To [redacted] concentration of [redacted]

2. What is the indicator used in this experiment ?

   [redacted]

3. What is the total volume of the solution in the conical flask for the final titration (III)?

   [redacted]

4. What is the pH of the solution in the conical flask at the end point of the titration ?

   [redacted]

5. Does addition of distilled water affect the result of titration ? Explain the reason.

   [redacted] , **w**ater [redacted] react with the reagents.

6. State ONE problems that ROSSA might encounter during the experiment.

   [redacted]

7. State ONE precaution steps can be taken during the experiment

   [redacted]

8. State the conclusion for this experiment.

   The concentration of HCl is [redacted]

LIVEWORKSHEETS