Thursday 19 August 2021

Revision: Electricity / Conductors and Insulators

A. Tick **(/)** the objects that **can light up a bulb** in a circuit.

Tick **(X)** the objects that **cannot light up a bulb** in a circuit.

1.

2.

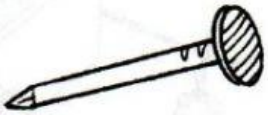

3.

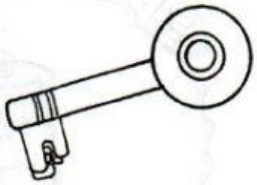

4.

5.

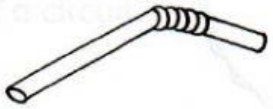

6.

7.

8.

9.

LIVEWORKSHEETS

B. Write ' **light up** ' or ' **does not light up** ' for the each diagram below.

1

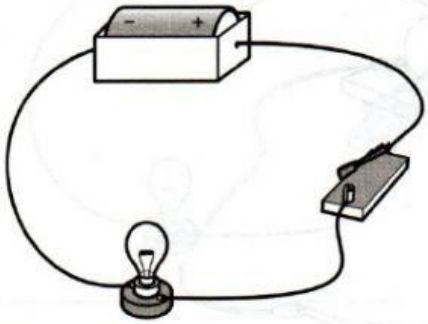

2

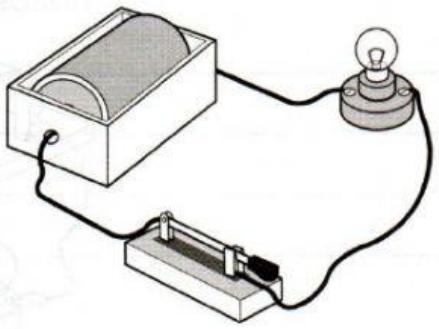

3

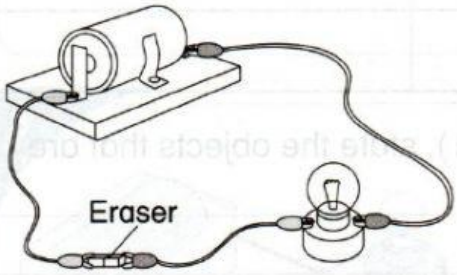

4

LIVEWORKSHEETS

C. The diagram below shows an experiment to test whether the bulb lights up when different objects are used as testing materials.
Gambar rajah di bawah menunjukkan uji kaji untuk menguji sama ada mentol menyala apabila objek yang berlainan digunakan sebagai bahan uji.

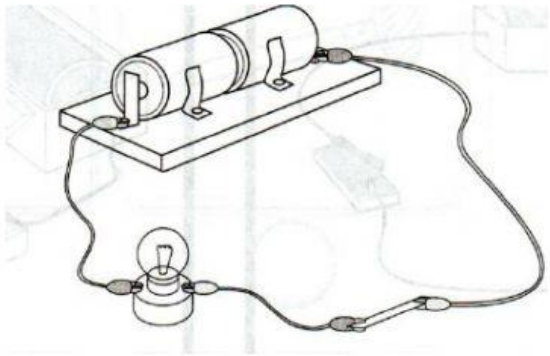

1. Write the observation for the following tested materials.
(**light up** , **does not light up**)
Tulis hasil pemerhatian mengikut bahan uji ini.

Type of object / Jenis objek	Bulb / mentol
Coin / duit syiling	
Rubber band / gelang getah	
Needle / jarum	
Plastic spoon / sudu plastik	

2. Based on the observation in (1), state the object that are
Berdasarkan hasil pemerhatian, nyatakan sama ada objek ialah

a) electric conductors : _____

b) electric insulators : _____

3. What conclusion can be made from the investigation ?
Apakah kesimpulan yang dapat dibuat daripada penyiasatan ini?

Objects that make the bulb light up are _____ while objects that do not make the light up are _____ .

LIVEWORKSHEETS

D. State whether the bulb **light up** or **does not light up**. Then give your reason.
Nyatakan mentol bernyala atau tidak bernyala. Kemudian, beri sebab.

* The circuit is complete.
* The circuit is incomplete because the switch is opened.

1

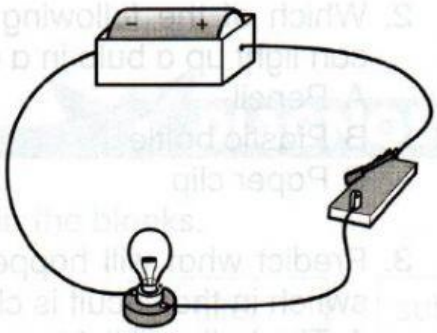

The bulb _____.
Reason:

_____
_____
_____
_____

2

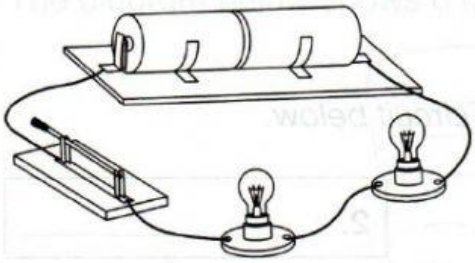

The bulb _____.
Reason:

_____
_____
_____

3

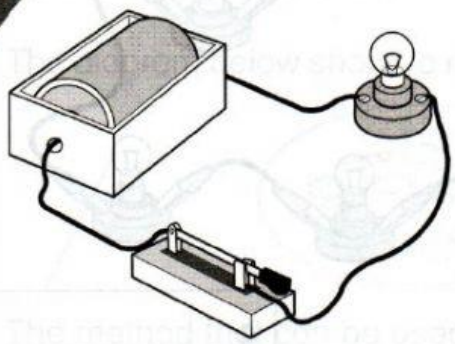

The bulb _____.
Reason:

_____
_____
_____
_____

LIVEWORKSHEETS