Nama :

Tarikh :

Tick (√) which circuit light up brighter?

1.

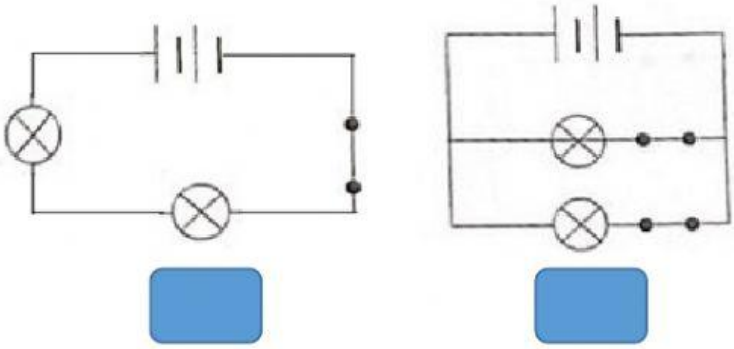

2.

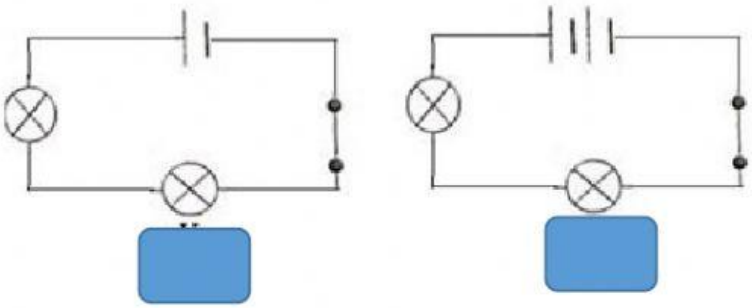

3.

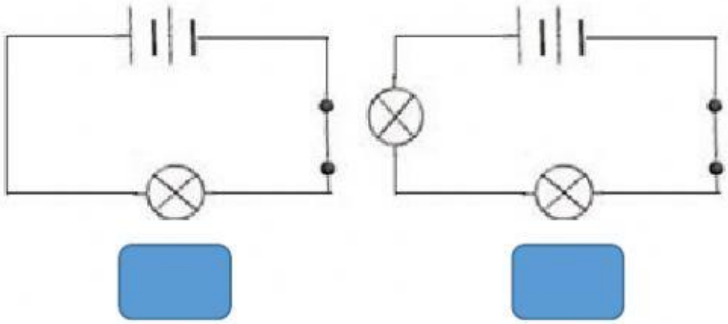

4.

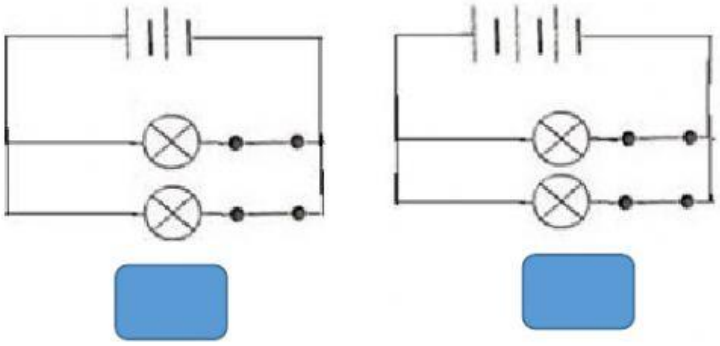

LIVEWORKSHEETS